符合RoHS环保要求

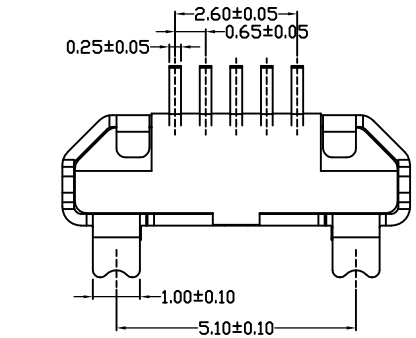

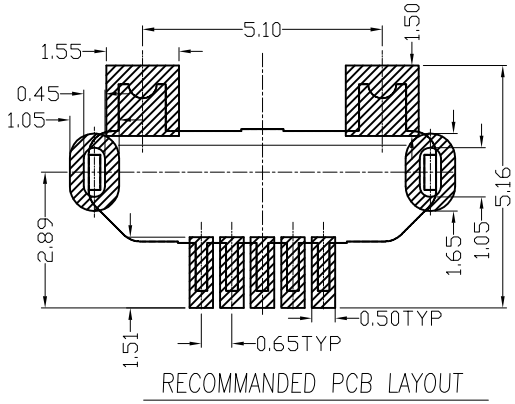

备注:

1. 产品规格:
   - 1-1. 插入力:35N MAX.
   - 1-2. 拔出力:8N MIN. INITIAL 8-25N AFTER
   - 1-3. 额定电流:1.0A
   - 1-4. 额定电压:30V
   - 1-5. 耐久性:5000 CYCLES MIN.
   - 1-6. 耐电压:100V AC MIN.
   - 1-7. 接触阻抗:30mΩ MAX. INITIAL;40mΩ MAX AFTER
   - 1-8. 绝缘电阻:100MΩ MIN
   - 1-9. 工作温度:-30° TO +80°
2. 材质:
   - 2.1胶芯：LCP UL94V-0
   - 2.2端子：C2680R-H,镍底，镀全金1μ″
   - 2.3外壳：SUS201/301，表面镀雾锡/镀镍
3. 重点尺寸标识″▲″符号

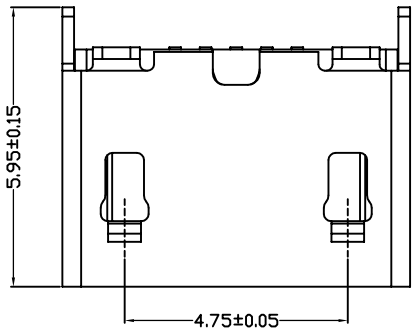

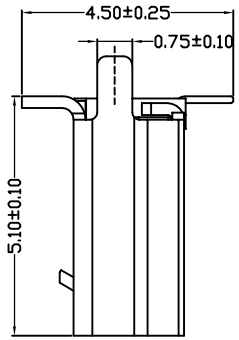

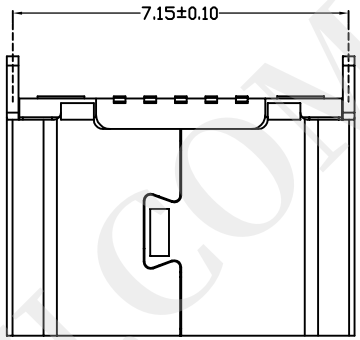

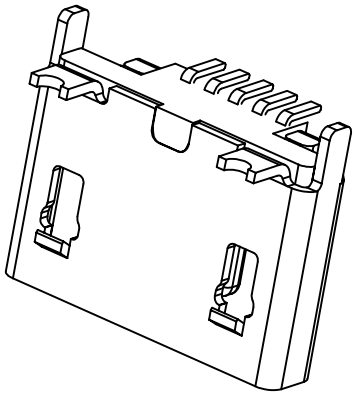

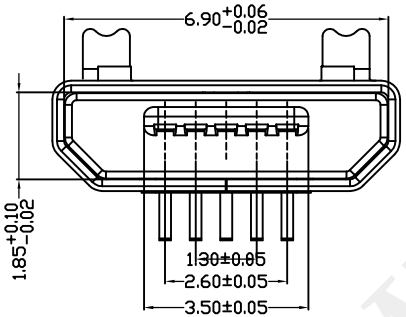

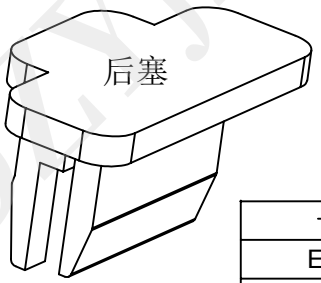

———		new		2015/5/3	A	瀚源
ECN BO.		DESCRIPTION.		DATE.	REV.	
DESIGNED	CHECKED	APPROVAL	DRAWING NUMBER		SCALT: 1/2	SCALE: 3:1
Mikey	Tom	Jerry	PART NAME	051N-4BCH51-F2	UNLESS OTHERWISE SPECIFIED,TOLERANCE:	X. ±0.25
			MODEL NAME	051N-4BCH51-F2		X.x ±0.20
						X.xx ±0.15
			3RD ANGLE PROJ	HanElectricity Co.,LTD		ANGULAR ±3°
						FILE. NO.

WWW.DZYJZJ.COM