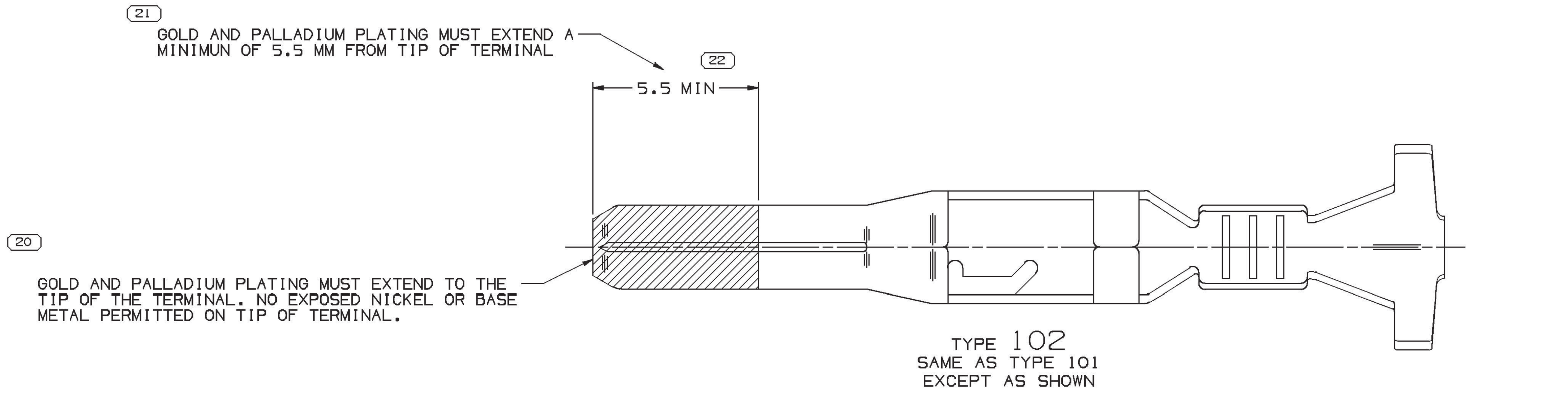

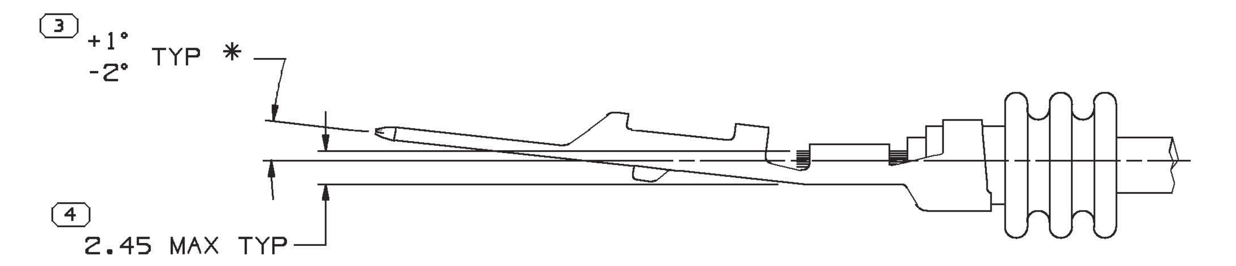

TERMINAL, SEAL AND CABLE ALIGNMENT

SCALE 5:1

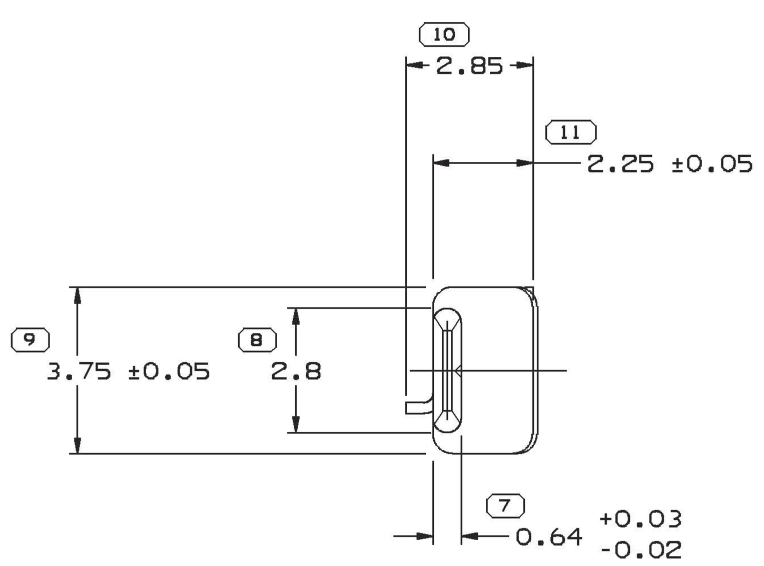

VIEW TO X-X

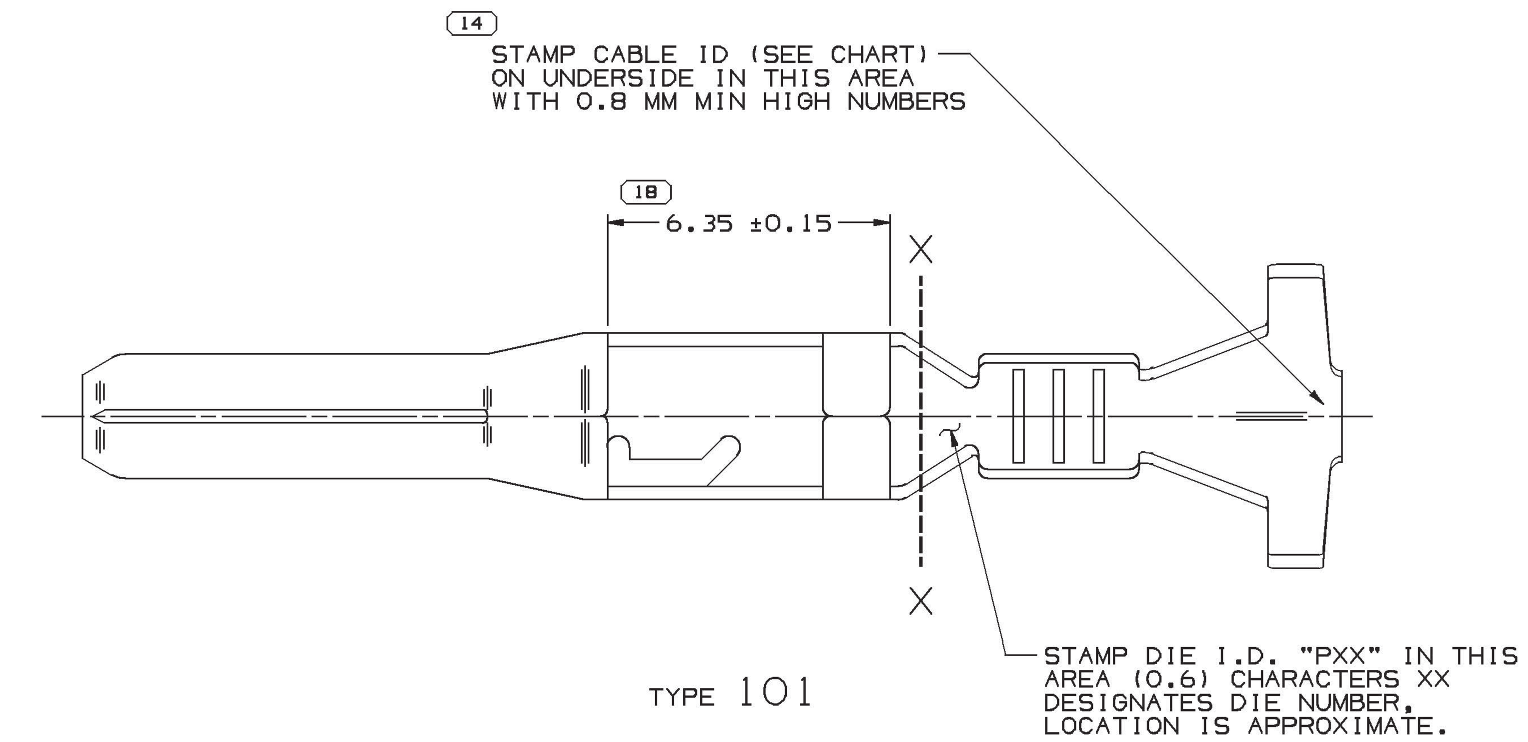

TYPE 101

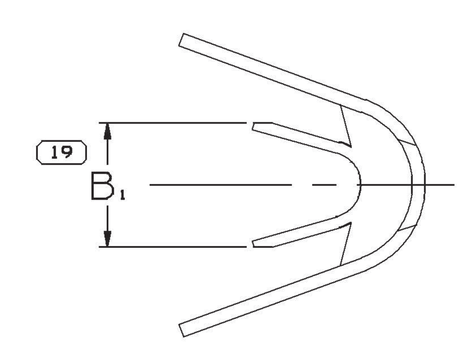

VIEW TO X-X

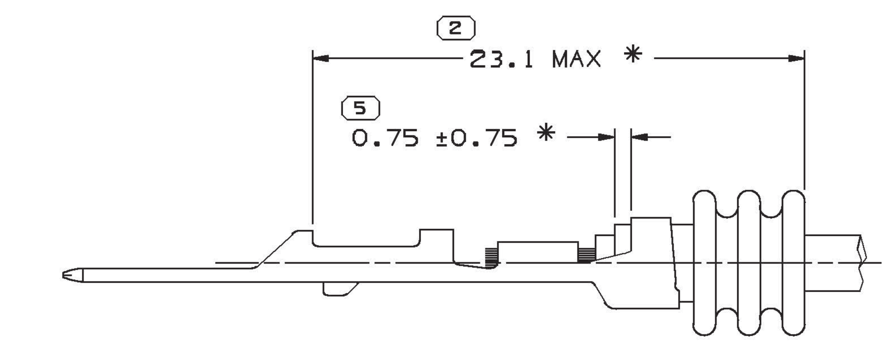

THREE RIB SEAL POSITION REF

SCALE 5:1

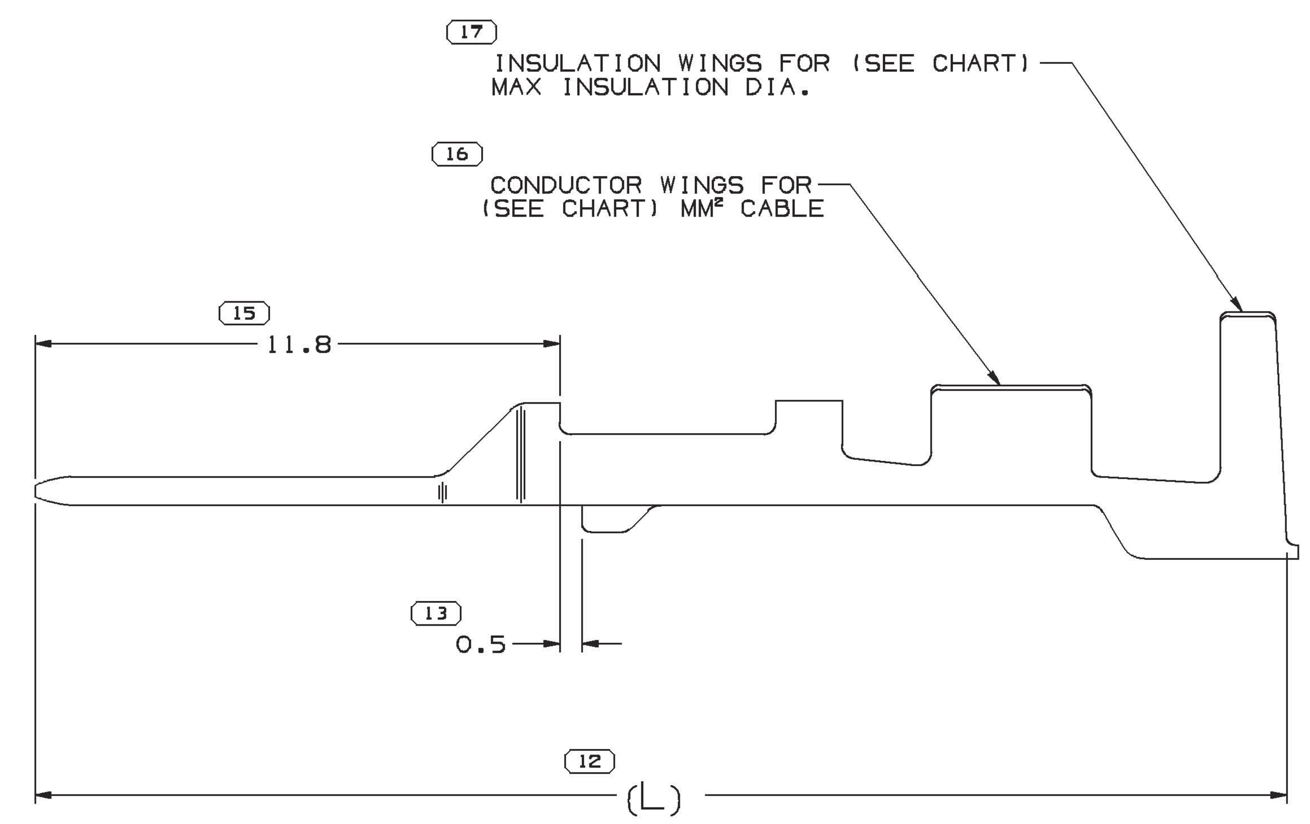

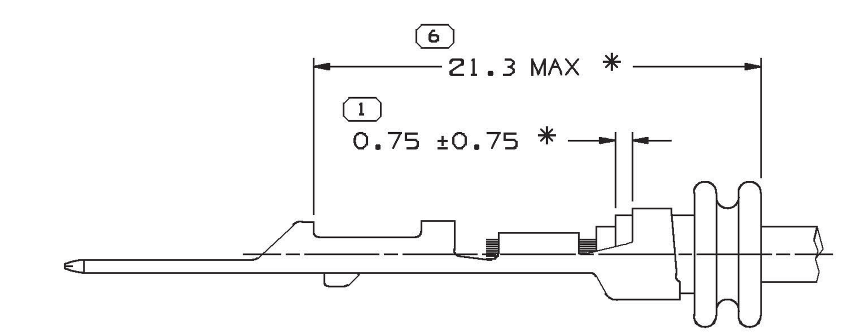

TWO RIB SEAL POSITION REF

SCALE 5:1

SYMBOL DEFINITION			MISSING SYMBOLS
A DIMENSION WITHOUT AN INSPECTION REPORT SYMBOL ( ) DOES NOT REQUIRE INSPECTION. IT MAY BE CONTROLLED ON THE INDIVIDUAL COMPONENT DRAWING.	TOTAL NO OF INSPECTIONS REQUIRED	22	NO MISSING SYMBOL NUMBER
	LAST NO. USED	22	

DATE	STG	REV	N/P	CHG	ZONE	REVISION HISTORY	AUTH	DR	APVD 1	APVD 2
30JL02	R	04	-	-		CLEARED REV COLUMN; ALL PARTS - UPDATED PDM ATTRIBUTES	226419	ECB	JAA	TTP
04OC04	R	05	-	-		ALL PARTS - ADDED STAMP DIE I.D.	259308	JPB	JVM	MKM
22SE08	R	06	-	-		13722257 & 13722260 - RELEASED	406107	JOA	FKV	EJB
16OC08	R	07	-	-		13737694 - RELEASED 13722257 & 13722260 - MAT'L SPEC WAS M6030MN8 C42500 EX HD	406450	EAJ	FKV	EJB
27OC08	R	08	-	-		15304730-32 & 15336262 - UPDATED MATERIAL CALLOUT	406618	VMR	HAD	VMR
26FE09	R	09	-	-		13737694 - MOVED TO DRAWING 15304721 SHT 1	407452	JTZ	FKV	GER
18MR10	R	10	-	-		ALL PARTS - UPDATED PDM ATTRIBUTES	410172	ESC	ESC	MAC
13JL10	R	11	-	-		13828750 - RELEASED	411349	VMR	VMR	VMR
04AU10	R	12	-	-		13839334 & 13839335 - RELEASED	411517	ACR	JVM	VMR
27AU10	R	13	-	-		ALL PARTS - UPDATED MAT'L DESC; ADDED "CONTACT TYPE" COLUMN, "CRIMP TYPE" COLUMN & "PLATING TYPE" NOTE	411799	HRS	HRS	VMR
06OC10	R	14	-	-		ALL PARTS - UPDATED "PLATING TYPE" NOTE	412130	JRL	JRL	VMR
06MR12	R	15	-	-		ALL PARTS - ADDED PREFERRED MAT'L SIZE AND UPDATED MATERIAL CALLOUT	417314	CBG	CBG	OAF
15OC14	R	16	-	-		13722257 & 13722260 - REVISED NOTE III ABOUT 'TARNISH INFO" IN PLATING TYPE NOTE AND 13839334 & 13839335 - OBSOLETE	427926	ABH	JVM	JSM

NOTES

1. UNLESS OTHERWISE SPECIFIED AND/OR INDICATED:

   DIMENSIONS ARE TO FACE OF VIEW SHOWN AND AUTOMATICALLY ROUNDED BY COMPUTER FOR INSPECTION (SEE MATH MODEL FOR PRECISE DIMENSIONS). FOR ALL OTHER DIMENSIONS NOT SHOWN BUT REQUIRED FOR TOOL BUILD, SEE MATH MODEL FOR PRECISE TOOL PATH DATA.

2. REFERENCE MATING COMPONENTS OR EQUIVALENT:

   TERMINAL 15304718

3. * DENOTES DIMENSIONS MADE AT CUT-OFF AND CRIMP DIE.

4. PLATING TYPE:

   I. REFLOW TIN 1.9 - 3.3 MICROMETERS THICK WITH A COPPER UNDERPLATE 0.5 MICROMETER TO 1.0 MICROMETER THICK.

   II. MATE TIN ELECTROPLATE 1.9 - 7.0 MICROMETERS THICK WITH A NICKEL UNDERPLATE 0.13 - 0.25 MICROMETERS THICK.

   III. SILVER 3.5 - 6.0 MICROMETERS THICK OVER 0.13 - 0.25 MICROMETERS THICK NICKEL UNDERPLATE.

   ○ FOR TERMINALS PACKAGED & STORED IN THE APPROVED MANNER, TARNISH ON SILVER PLATED SURFACES WILL NOT AFFECT THE PERFORMANCE OF THE PART.

   IV. GOLD FLASH 0.1 MICROMETERS THICK OVER 1.0 MICROMETER PALLADIUM AND NICKEL UNDERPLATE 0.37 - 0.62 MICROMETERS THICK.

   V. MATE TIN ELECTROPLATE 1.9 - 7.0 MICROMETERS THICK.

   PLATING TYPE INFORMATION SHOWN ABOVE IS REFERENCE ONLY, PLATING REQUIREMENTS ARE CONTAINED IN APPLICABLE MATERIAL SPECIFICATION.

PART NO	REV	N/P	STATUS	PREFERRED MAT'L SIZE (PLATED)	ALTERNATIVE MAT'L SIZE (PLATED)	MATERIAL DESCRIPTION	CABLE SIZE (MM²)	CABLE ID	CABLE DIA	TYPE	$B_{1 \pm 0.2}$	(L)	CONTACT AREA PLATING TYPE (SEE NOTE 4)	CRIMP AREA PLATING TYPE (SEE NOTE 4)
~~13839335~~	01	AD	-	0.3 X 35.75	0.3 X 36.12	AU PLATED COPPER ALLOY	0.75 - 1	17	2.25 - 1.7	102	2.65	28.15	IV	V
~~13839334~~	01	AD	-	0.3 X 35.75	0.3 X 36.12	AU PLATED COPPER ALLOY	0.35 - 0.5	21	1.85 - 1.2	102	2.1	28.15	IV	V
13828750	01	AC	-	0.3 X 35.75	0.3 X 36.12	AU PLATED COPPER ALLOY	1.5 - 3	13	3.2 - 2.2	102	3.75	28.15	IV	V
13722260	01	AF	-	0.3 X 35.75	0.3 X 35.75	AG PLATED COPPER ALLOY	0.75 - 1	17	2.25 - 1.7	101	2.65	28.15	III	II
13722257	01	AF	-	0.3 X 35.75	0.3 X 35.75	AG PLATED COPPER ALLOY	1.5 - 3	13	3.2 - 2.2	101	3.75	28.15	III	II
15336262	B7	-	-	0.3 X 35.75	0.3 X 36.12	COPPER ALLOY	1.25 - 2.5	14	3 - 2.05	101	3.7	28.15	I	I
15304732	E8	-	-	0.3 X 35.75	0.3 X 36.12	COPPER ALLOY	1.5 - 3	13	3.2 - 2.2	101	3.75	28.15	I	I
15304731	E8	-	-	0.3 X 35.75	0.3 X 36.12	COPPER ALLOY	0.75 - 1	17	2.25 - 1.7	101	2.65	28.15	I	I
15304730	C7	-	-	0.3 X 35.75	0.3 X 36.12	COPPER ALLOY	0.35 - 0.5	21	1.85 - 1.2	101	2.1	28.15	I	I

(8) PROCESS SENSITIVE DIMENSION

DIMENSIONS ENCLOSED IN ( ) INDICATE REFERENCE DIMENSIONS AND NO TOLERANCE LIMITS ARE ESTABLISHED

DIMENSIONAL RANGE (MM)		CHART D
FROM	0	>12
TO	12	
TOLERANCE UNLESS OTHERWISE SPECIFIED	±0.1	±0.2

ANGULAR TOLERANCE ±2°

A LINE DRAWN THROUGH A PART NUMBER INDICATES THAT PHYSICAL PARTS ARE NOT AVAILABLE FOR ORDERING.

PART NUMBERS THAT DO NOT HAVE A LINE PRESENT INDICATE THAT PHYSICAL PARTS ARE AVAILABLE FOR ORDERING.

CONTACT DELPHI SALES TO ASSURE AVAILABILITY OF PARTS.

DWG TYPE: PART DRAWING

STYLE

VOLUME (CM³)

DISTR CODE: D

UNLESS OTHERWISE SPECIFIED

THIS DOCUMENT IS IN ACCORDANCE WITH ASME Y14.5M-1994 AS AMENDED BY THE GM GLOBAL DIMENSIONING AND TOLERANCING ADDENDUM - 1997. ALL GEOMETRIC TOLERANCES AND RELATED DATUMS APPLY RFS. RULE #1(PERFECT FORM AT MMC) DOES NOT APPLY WHEN RELATIONSHIP BETWEEN FEATURES IS ESTABLISHED BY ORIENTATION OR LOCATION TOLERANCES. SEPARATE POSITION CALLOUTS MAY BE GAGED SEPARATELY, REGARDLESS OF DATUM REFERENCE.

ALL DIMENSIONS ARE IN MILLIMETERS

REFERENCE

THIRD ANGLE PROJECTION

DO NOT SCALE

USE MATH DATA

CAD NX

DELPHI

DELPHI PACKARD ELECTRICAL/ELECTRONIC ARCHITECTURE

WARREN, OH

COPYRIGHT 1996 DELPHI CORPORATION AND/OR ITS AFFILIATES. ALL RIGHTS RESERVED. REVISED 2014

THIS DRAWING IS THE PROPERTY OF DELPHI CORPORATION AND CONTAINS DELPHI CONFIDENTIAL INFORMATION. THE REPRODUCTION, DISTRIBUTION AND UTILIZATION OF THIS DOCUMENT OR ITS RELATED CAD MATH DATA, AS WELL AS COMMUNICATION OF ANY CONTENT TO OTHERS, WITHOUT EXPRESS AUTHORIZATION, IS PROHIBITED.

		DATE
DR		
APVD1	N. VERGARA	06JN96
APVD2	T. STEELE	08JN96
APVD3	S.C. HSIEH	28JN96
APVD4		
APVD5		

SUBSTANCES OF CONCERN AND RECYCLED CONTENT PER DELPHI 10949001

MATERIAL: SEE CHART

DRAWING NAME: TAXI TERM M GT 280 SEALED

DRAWING NUMBER: 15304726

SIZE	SCALE	FRAME NO	SHEET NO	STG	REV	N/P
A0	10:1	1 OF 1	1 OF 1	R	16	-

User: xzhs4w Part: 15304726-CUS01-S01 Date: 01-Dec-14 Time: 10:04

WWW.DZYJZJ.COM