产品规格书

Sample Approval Sheet

敬　呈：　To:

客 户 料 号:
Customer P/N:

产 品 名 称:
Description: 0.4MM 后锁式 FFC/FPC 连接器

规 格 型 号:
Spec: H=2.55mm 适用排线 0.3mm

钿 威 料号:
DIANWEI P/N 8.68A0.XXX200

客 户 确 认 Customer Approve		
承　办 Draft	审　核 Confirm	审　核 Approve

钿 威 科 技 DIANWEI Technology		
承　办 Draft	工　程 Engineer	审　核 Approve

东莞市钿威电子科技有限公司

DONGGUAN DIANWEI Electronic Technology CO.,LTD

厂址:东莞市塘厦镇沙湖社区大岭边路 22 号　邮编：523725

Address:NO.22, DALINGBIAN ROAD,SHAHU COMMUNITY,TANGXIA TOWN,DONGGUAN CITY CHINA

Tel:+86-769-8788 8322　Fax:+86-769-8788 8321

E-Mail: sales@dianwei.cn　Http://www.dianwei.cn

■国家级高新技术企业　■IATF16949　■ISO9001:2015　■ISO14001

WWW.DZYJZJ.COM WWW.DZYJZJ

DRAWING TYPE	CUSTOMER DRAWING

MARK	DATE	DESCRIPTION	DESIGN
X1	2024.09.09	NEW	QW
X2	2024.11.19	Modify	CHEN
X3	2026.01.08	新增符号标识、编号	Rao

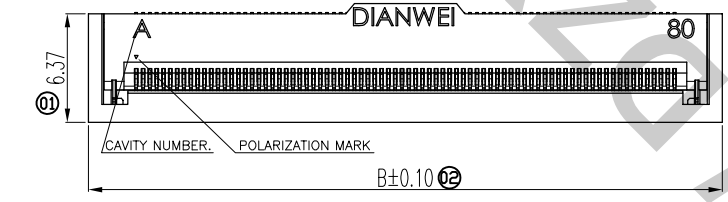

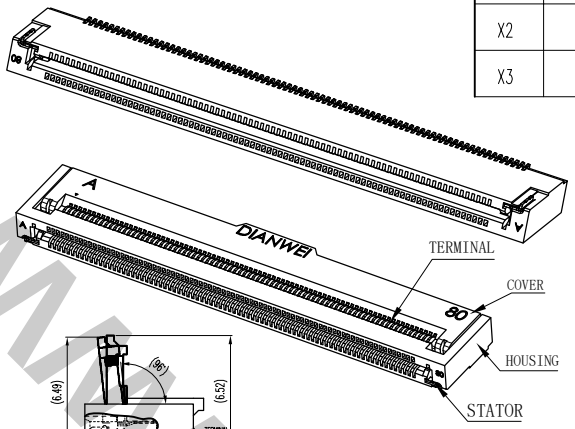

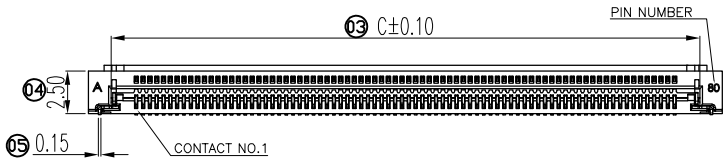

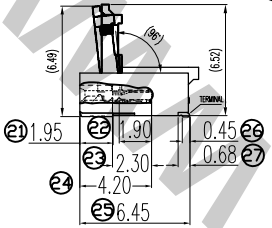

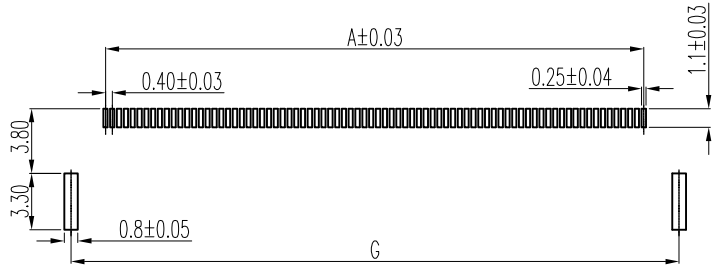

RECOMMENDED PCB LAYOUT

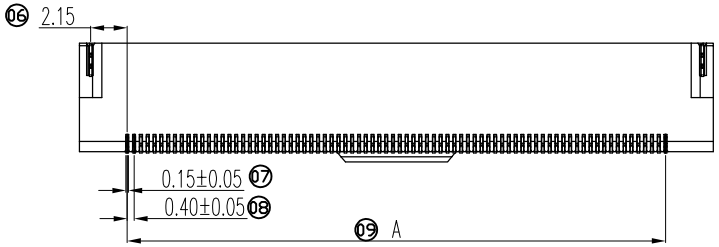

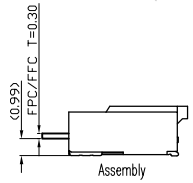

1. PART NO. LEGEND:
   8.68A0 . *** 2 0 0
   └CONTACT PIN NUMBER:***=CONTACT PIN NUMBER
2. PERFORMANCE:
2.1: CURRENT RATING: 0.5A/PIN.
2.2: VOLTAGE RATING: 50V (AC/DC).
2.3: CONTACT RESISTANCE: INITIAL VALUE 30mOHM Max,
2.4: INSULATION RESISTANCE: 100MOHM Min.
2.5: DIELECTRIC WITHSTANDING VOLTAGE: 250V AC FOR 1MINUTE;

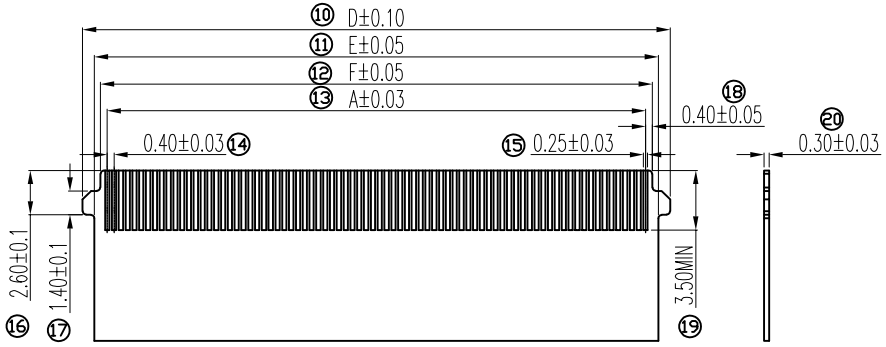

RECOMMENDED FFC/FPC

NO.	COMPONENTS	MATERIALS	FINISH/COLOR SPECIFICATION	QUANTITY
4	STATOR	STEEL	MATTE Sn	2
3	TERMINAL	PHOSPHOR BRONZE	GOLD-PLATED	POSITIONS
2	COVER	THERMOPLASTIC UL94V-0	BLACK	1
1	HOUSING	THERMOPLASTIC UL94V-0	NATURAL	1

Pin No.	P/N	DIM A	DIM B	DIM C	DIM D	DIM E	DIM F	DIM G
70	8.68A0.070200	27.60	33.20	30.56	30.50	29.10	28.40	31.70
80	8.68A0.080200	31.60	37.20	34.56	34.50	33.10	32.40	35.70
90	8.68A0.090200	35.60	41.20	38.56	38.50	37.10	36.40	39.70
100	8.68A0.100200	39.60	45.20	42.56	42.50	41.10	40.40	43.70
110	8.68A0.110200	43.60	49.20	46.56	46.50	45.10	44.40	47.70
120	8.68A0.120200	47.60	53.20	50.56	50.50	49.10	48.40	51.70

XX	FAI尺寸项目
★	安全、法规特殊特性
▽	产品特殊特性
○	过程特殊特性
▽	PPK/CPK/100%检验
@	QC检验项目
●	巡检尺寸

UNLESS OTHERWISE SPECIFIED TOLERANCE			
ANG	TOL	DIM	TOL
.X	±3.0°	.X	±0.30
.XX	±2.0°	.XX	±0.20
.XXX	±1.0°	.XXX	±0.10

DIANWEI
东莞市钿威电子科技有限公司
DONGGUAN DIANWEI ELECTRONIC TECHNOLOGY CO., LTD
Tel: +86-769-8788 8322 Fax: +86-769-8788 8321 E-mail: sales@dianwei.cn Http://www.dianwei.cn

APPROVED	VERIFIED	DESIGN	DRAWING NO	PART NAME:	0.4MM 后锁式FFC/FPC连接器
		QW	8.68A0-C	PART NO.	8.68A0.***200

DATE	UNITS	SCALE	PAGE	REV
2024.11.19	mm	1:1	1/1	X3

NOTE: ALL RIGHTS RESERVED,BANNED COPY!

WWW.DZJ.COM WWW.DZXY.ZZ

DRAWING TYPE	PACKAGE DRAWING

MARK	DATE	DESCRIPTION	DESIGN
A	2025.06.08	NEW	Rao

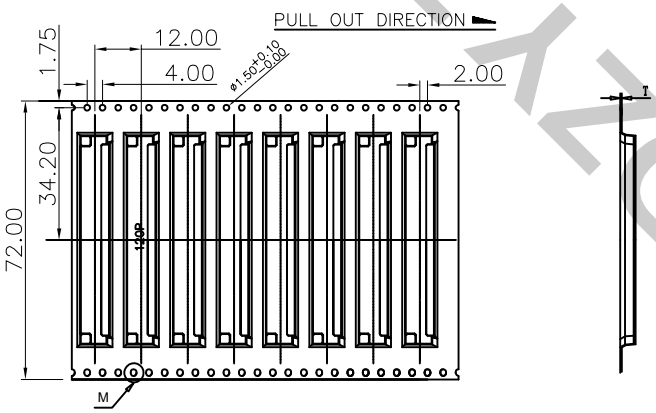

NOTES:
1. MATERIAL:
   1.1 CARRY TAPE:HIPS,T=0.35±0.05mm,CLEAR
   1.2 REEL:HIPS,
   1.3 SHIM:PS,CLEAR.
2. PRIMARY PACKING:1400PCS/REEL.
3. SECONDARY PACKING:SEE PACKING LIST
4. PEELING RESISTANCE: 0.1~1.3N(10~130gf); PEELING ANGLE: 165°~180°; PEELING SPEED: 300mm/minutes.

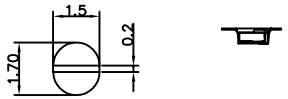

A放大图

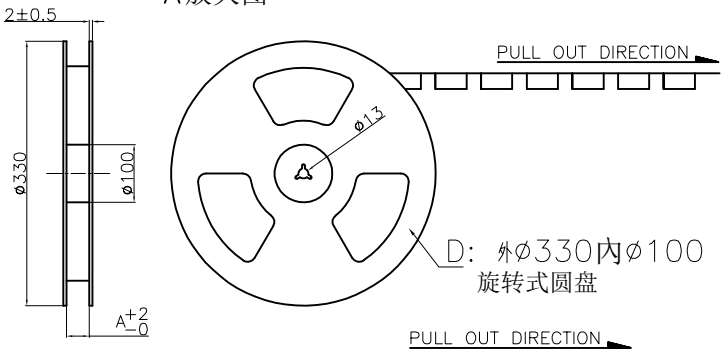

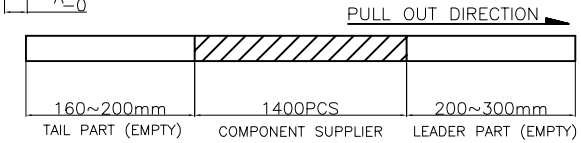

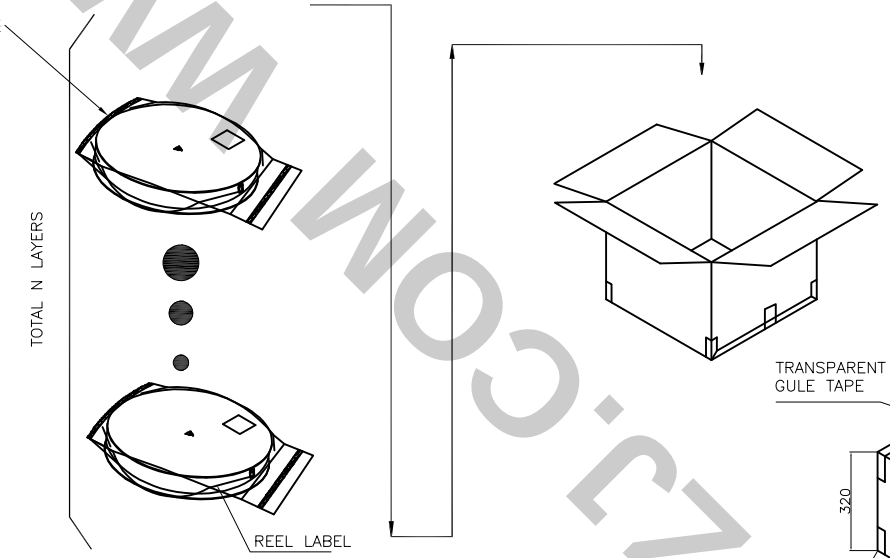

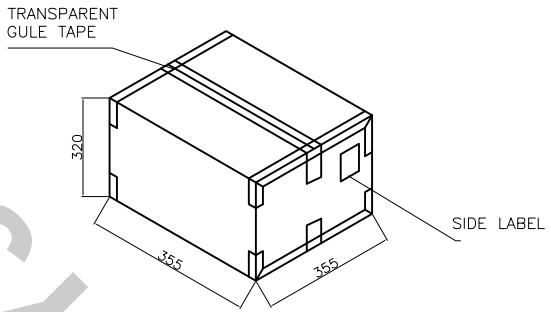

NOTE: ALL RIGHTS RESERVED,BANNED COPY!

UNLESS OTHERWISE SPECIFIED TOLERANCE			
ANG	TOL	DIM	TOL
.X	±3.0°	.X	±0.30
.XX	±2.0°	.XX	±0.20
.XXX	±1.0°	.XXX	±0.10

DIANWEI 东莞市钿威电子科技有限公司
DONGGUAN DIANWEI ELECTRONIC TECHNOLOGY CO.,LTD
Tel: +86-769-8788 8322 Fax: +86-769-8788 8321 E-mail: sales@dianwei.cn Http://www.dianwei.cn

APPROVED	VERIFIED	DESIGN
		Rao

DRAWING NO	8.68A0-P
PART NAME:	0.4MM 后锁式FFC/FPC连接器 包装图
PART NO.	8.68A0.***200

DATE	UNITS	SCALE	PAGE	REV
2025.06.08	mm	1:1	1/1	A

QP-04-33-B

WWW.DZYJZJ.COM

Draft Dept. (制订部门)： Engineering Dept.

Applicable Dept. (适用部门)： QA Dept. (品保部) Eng. Dept. (工程部) MFG Dept. (制造部)

Rev. 版本	Issued Date 发行日期	Revised (制订、修订摘要)
A	2024.07.25	Released 新制定

Approve： Check： Draft：CHEN

未经本公司同意，不得拷贝本数据.

Without agreement in advance, it was forbidden to copy the data in this specification

WWW.DZYJZJ.COM WWW.DZYJZJ

1. Scope:

范围：

The Spec is applicable to Product series 8.68A "0.4mm FFC/FPC Bottom Contact Rear flip Connector"

此作业规范仅适用于 "0.4mm FFC/FPC Bottom Contact Rear flip Connector"产品系列为：8.68A

2. Reference Documents:

参考文件：

The following documents is part of the designated specifications, if the specification is conflicting with drawing, it shall be subject to drawing. If specification and reference documents conflict, shall prevail specification.

下列文件是指定规格书的一部份，如果规格书要求与产品图纸相矛盾，应以产品图纸为准，如果规格书与参考文件矛盾，应以规格书为准。

A. EIA-364 ：电子连接器及接插件测试程序。
B. UL STD-94 ：关于塑胶材料设备零配件及器材阻燃性测试规范。
C. USCAR 2: 汽车电连接器系统性能规范

3. Spec.:

要求：

3.1Material:

材料组成：

A. Housing: THERMOPLASTIC UL94V-0
   主 体： THERMOPLASTIC UL94V-0
B. Cover: LCP (UL 94V-0)
   锁 扣： LCP (UL 94V-0)
C. Terminal: Copper Alloy
   端 子： 铜合金
D. Stator: Copper Alloy
   定位片：铜合金

3.2 Mechanism:

设计及结构：

1） Series: 0.4mm FFC/FPC Bottom Contact Rear flip Connector
2） 系列名：0.4mm FFC/FPC Bottom Contact Rear flip Connector
3） PIN Position: See drawing
   PIN 位：详见产品图纸

WWW.DZYJZJ.COM WWW.DZYJZJ

4） Contact： Single side under the contact

接触类型：单面下接触

5） TML Soldering：SMT

端子形状：SMT 型

6） PCB Thickness：T=0.3±0.02mm

适合 FPC 厚：T=0.3±0.02mm

7） Plating Spec.： Contact area and solder area gold plating 1~3u”,See drawing

电镀规格：接触区和焊接区镀金 1~3u”,详见产品图纸

3.3 Parameter：

性能：

1） Standard conditions：

标准状态：

A Operation Temperature：-40 ~ +105℃ Without ice or dew

使用温度：-40 ~ +105℃ 没有结露结冰的条件下

B Operation Humidity：20-85％RH

使用湿度：20-85％RH

C Storage Temperature：−10～+50℃ Without ice or dew

保存温度：−10～+50℃ 没有结露结冰的条件下

D Storage Humidity： 20～85%RH

保存湿度： 20～85%RH

2） Rating Voltage： ambient temperature 20℃ 50V (AC/DC)

额定电压：周围温度 20℃ 50V (AC/DC)

3） Rating Current ambient temperature 20℃ 0.4A / PIN

额定电流：周围温度 20℃ 0.4A / PIN

本产品设计符合电性的、机械的及环境性能要求， 如下图表所示

WWW.DZYJZJ.COM WWW.DZYJZJ

4. Testing item and procedure 测试要求及基本程序：

一、Visual Inspection 产 品 检 查				
项目 Item	Content 内容	Clause 条款	Test Condition 试验条件	Judgment 判定标准
1	Visual Inspection 产品检查	Comply with drawing and Spec. 符合本公司图纸及规格要求	Eye 目视	No Damage 无损伤

二、Electrical Characters 电 气 特 性			
Item 项目	Content 描 述	Test Condition 测试条件	Spec.要 求
1	Contact Resistance 接触阻抗	Mate applicable FPC and measure by dry circuit, 20mV Max. AC/DC, 1mA. 同一根端子测试，电流：1mA，电压：AC/DC 20mV 以下，使用电线：适配 FFC 标准线。	40mΩ Max
2	Insulation Resistance 绝缘阻抗	Apply 100V DC 1Minutes between adjacent terminal 相邻端子间 DC 100V，1 分钟。	100MΩ MIN
3	Dielectric 耐压测试	Apply 250V AC 1Minutes between adjacent terminal 相邻端子间 AC 250V， 1 分钟。	No Damage/Shorting 无击穿，无短路

三、Mechanic Parameter 机 械 性 能			
1	Retention Force of single Pin 端子单 PIN 保持力	Apply axial pull out force at the rate of 以 25~100mm/分的速度，匀速垂直拔出	0.2N/ PIN MIN
	Retention force of GND Pin 固定片单 PIN 保持力	Apply axial pull out force at the rate of 25~100mm/Min 以 25~100mm/分的速度，匀速垂直拔出	0.3N / PIN MIN
2.	Retention force of FFC/FPC FFC/FPC 保持力	Inserted FFC into connector, apply axial pull out force at the rate of 20~100mm/Min FFC 插入连接器后，以 20~100mm/分匀速垂直拔出	0.2N Min/Pin PIN 数 X 0.2N Min

WWW.DZYJZJ.COM WWW.DZYJZJ

3	Shock 冲击	Mate applicable FPC and subject to the following shock conditions. With acceleration 981m/s² lasting 6ms, 3times of shocks shall be applied for each 6 directions along 3 mutually perpendicular axes 测试速度 981m/s2， 持续时间 6msXYZ 3 个轴 6 各方向各 3 次（共 18 次） FPC 嵌合状态下测试	1、 1μsec Max. of discontinuity is ok 试验中没有发生超过 1μs 以上的断电； 2、 80mΩ MAX of Contact resistance is ok, No Damage 试验后阻抗值 80mΩ MAX，外观无异常；
4	Vibration 耐震性	Mate connectors and subject to the following vibration conditions, for period of 2 hours in each of 3 mutually perpendicular axes. Amplitude: 1.52mm Frequency: 10~55~10Hz in 1 minutes 频率 10-55-10Hz， 震幅 1.52mm，转换时间 1 分钟传递。 X/Y/Z 方向各 2 小时，共计 6 小时 FPC 嵌合状态下测试	
四、Duration 耐 久 性 能			
1	Duration 耐久	lock/dis-lock 20 times with loading 负荷状态下 20 次。	80mΩ MAX of Contact resistance is ok, No Damage 试验后阻抗值 80mΩ MAX，外观无异常；
五、Environment 环境测试			
1	Heat Resistance 耐热性	Mate applicable FPC and expose to 105±2℃ for 96H, Upon completion of the exposure period, the test specimens shall be conditioned at ambient room conditions for 1H, after which the specified measurements shall be performed. 105±2℃条件下 放置 96 小时，然后在常温常湿下放置 1 小时后测试 FPC 嵌合状态下测试	1、 1μsec Max. of discontinuity is ok 试验中没有发生超过 1μs 以上的断电； 2、 80mΩ MAX of Contact resistance is ok 试验后阻抗值 80mΩ MAX，外观无异常； 3、 Retention force is above 0.2N/Pin FPC 保持力强度在 PIN 数 X0.2N 以上；

WWW.DZYJZ.COM WWW.DZYJZ

<table>
<tr><td>2</td><td>Humidity
耐湿性</td><td>Mate applicable FPC and expose to 40±3℃, relative humidity 90~95% for 96H, upon completion of the exposure period, the test specimens shall be conditioned at ambient room conditions for 1H, after which the specified measurements shall be performed.
温度 40±3℃；湿度 90~95% RH，时间 96H 然后在常温常湿下放置 1 小时后测试
FPC 嵌合状态下测试</td><td>1、 1μsec Max. of discontinuity is ok
试验中没有发生超过 1μs 以上的断电；
2、 Contact Resistance80m Ω Max
阻抗：80m Ω Max
3、 Insulation Resistance：100 M Ω Min
绝缘阻抗：100 M Ω Min
4、 Dielectric: No damage, Shorting
耐电压：无击穿，短路；
5、 Visual ok
外观无异常；</td></tr>
<tr><td>3</td><td>High/Low temperature
冷热冲击</td><td>Mate applicable FPC and proceed 5cycles of high/low temperature based on below table, after that, the test specimens shall be conditioned at ambient room conditions for 1H before the specified measurements were performed
按下面表格中的温度循环条件，实施 5 个周期，然后在常温常湿下放置 1 小时后测试
FPC 嵌合状态下测试
<table><tr><td></td><td>Temperature</td><td>Time</td></tr><tr><td>1</td><td>-55+0 -3℃</td><td>30min</td></tr><tr><td>2</td><td>25+10 -5℃</td><td>5min</td></tr><tr><td>3</td><td>105+3 -0℃</td><td>30min</td></tr><tr><td>4</td><td>25+10 -5℃</td><td>5min</td></tr></table></td><td>1、 1μsec Max. of discontinuity is ok
试验中没有发生超过 1μs 以上的断电；
2、 Contact Resistance: 80 m Ω Max
试验后连接接触阻抗值在 80mΩ 以下；
3、 Visual ok
外观无异常；
4、 Retention force is above 0.2N/Pin
FPC 保持力强度在 PIN 数 X0.2N 以上；</td></tr>
<tr><td>4</td><td>Salt Spray(Gold Plating)
盐水喷雾（镀金）</td><td>Expose connector to 5% salt water density and temperature 35℃±1℃， the specimens shall be lasted 48H
在盐水浓度为 5%，温度 35℃±1℃环境中持续 48 小时</td><td>1、 No Corrosion
试验后触点未发生异常腐蚀</td></tr>
<tr><td colspan="4">六、Solderability 焊接性能</td></tr>
</table>

WWW.DZYJZJ.COM WWW.DZYJZJ

5	Solderability 可焊接性	Dip soldering tail into Tin oven, temperature of Tin oven is 245℃±5℃. the test specimens shall be lasted 3sec. 将焊锡部分浸入温度为 245℃±5℃的锡炉中保持 3 秒	Soldering tail shall be easy wetting by melted tin, Tin shall cover over 90% of dipping area of soldering leg 焊接端应容易被熔融焊料润湿，粘锡面积应占浸入面积的 90%以上
6	Resistance to soldering heat 焊接耐热性	Heating temperature profile: 150 ~ 180 ℃ 60~120Sec.,Peak temperature: 250±5 ℃ ,over 230 ℃ last 30±5Sec. 预先加热： 150~180℃ 60~120 秒 焊接：峰值温度 250℃ 230℃以上 30±5 秒	1、 Contact resistance 80mΩ Max., no damage 试验后连接阻抗值在 80mΩ 以下，且外观无异常； 2 、 Retention force is above 0.2N/Pin FPC 保持力强度在 PIN 数 X0.2N 以上；
7	Recommend Temperature profile 推荐焊接条件 （温度/焊接时间）	Heating temperature profile: 150 ~ 180 ℃ 60~120Sec.,Peak temperature: 250±5 ℃ , over 225 ℃ last 30 ± 5Sec. the profile is only for reference, lock cover shall be opened when proceed IR reflow 预先加热： 150~180℃ 60~120 秒 焊接：峰值温度 250±5℃ 230℃以上 30-60 秒 此温度曲线图仅为参考，可根据焊锡种类，数量等进行改变。	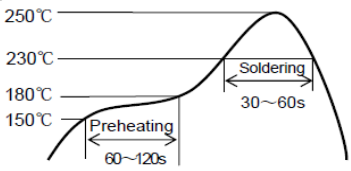 Temperature profile

Note: The test specimens shall be complied to the visual requirement and clause 6.

备注： 产品测试后，应符合目视外观要求，无损伤，且需符合章 6 测试顺序规定的附加要求

5. Group Test

产品认证及再认证顺序：

A. Sampling 样品选择：

Sampling requested by below table shall be applicable to the principle of randomness

样品选择应按照结构栏要求符合随意性原则

B. Sequence 测试顺序：

Below is test sequence

下列是群组检测顺序的范例：

Test Content/sequence 测试认证顺序		Test Group 测试项目								
		A1	A2	A3	A4	A5	A6	A7	A8	A9
1	Visual Inspection 产品检验	1，5	1，5	1，5	1，6	1，9	1，6	1，3	1，3	1，6
2	Contact Resistance 接触阻抗测试	2，4		2，4	2，5	2，6	2，5			2，5

WWW.DZYJZJ.COM WWW.DZYJZJ

3	Insulation Resistance 绝缘阻抗测试					3，7				
4	Dielectric withstand voltage 耐电压测试					4，8				
5	TML Retention Force 端子保持力测试		4							
6	GND Retention Force 固定片保持力测试		3							
7	FFC/FPC Retention Force FFC/FPC 保持力		2		4		4			4
8	Vibration 耐震性	3								
9	Duration 耐久			3						
10	Heat Resistance 耐热性				3					
11	Humidity 耐湿性					5				
12	High/Low Temperature 冷热冲击						3			
13	Salt Spray 盐水喷雾							2		
14	Solderability 可焊接性								2	
15	Resistance To Soldering Heat 焊接耐热性									3
16	Recommend Temperature Profile 推荐焊接条件（温度/焊接时间）									
	Sample Size 每组测试之样品数量	B1	B2	B3	B4	B5	B6	B7	B8	B9

Notes:：

1. Sampling principle: Each test group shall include the representative sample, i.e: each group have one complete cavity of sample. If there are no cavity number or marking on sample, sample shall be applicable to the principle of randomness
   测试群组样品选定原则：指每一具体测试群组中，样品需具有全面性，如每一群组样品为完整同一模穴。若无法区分模号或编号者，则符合随机性原则；
2. Test group selection principle: test groups conform to the principle of randomness, 9 groups are selected randomly to test in the whole groups
   测试群组选定原则：测试群组分组符合随机性，指从若干群组中随机选取 9 组进行测试；

WWW.DZYJZJ.COM WWW.DZYJZJ

3. A1，A2，A3……A9 means test group number
   图表中 A1，A2，A3……A9 表示为测试群组序号；
4. B1，B2，B3…….B9 means sample size, when sample has cavity mark or numbering, it means sample size is one complete cavity of sample. Otherwise, it means 8pcs sample.
   图表中 B1，B2，B3…….B9 表示为测试群组中每组样品之数量，当有模号或编号时，表示为完整的一模，无模号或编号时，B1，B2…….B9 每组表示为 8PCS 样品.

6. Quality Warranty

质量保证的规定：

Unless otherwise specified, we comply with the quality of samples submitted for customer qualification, we will follow up the released process, in order to ensure that products meet specifications when customer start to purchase product from us. In case any material or design changed, we will provide changed sample to get customer's approval, before sample was qualified, we will not ship changed product to customer.

除非特别规定，在合约或采购中，我们将遵守提交于客户产品的质量，我们将按照已控制的制程作业过程，以保证产品符合规格的要求。若组成材料出现替用或变更时，一定将变理之样品预先提交客户批准再执行。

6.1 Re-qualification

二次承认检查：

If there are any changes that impact the structure, function and quality, product need proceed new product developing process to verify product quality and reliability by Engineer

如果制造过程中有较大的变更影响到产品形式或功能产品质量等，将按组成配件的测试要求做再认证测试，产品测试将按照开发产品质量及可靠性的要求由工程师再认证。

6.2 Quality Requirement 质量要求：

If test device setting up mistake or improper operation lead into misjudgment, need re-qualify product by new sample.

If Dianwei sample is NG, Dianwei shall improve sample before Dianwei send sample to customer for verification purpose.

由于设备测试设置或操作不当等导致不良判定，可再送样认证.。

当产品不良发生时，应采取矫正措施及再送样，再送样前应测试确认矫正措施。

6.3 Test Data 检验数据：

Test data shall be recorded, evaluated and as evidence of above clause.

检查测试数据应记录，评估，并作为以上条款的证据。

6.4 Quality test verification 质量测试确认：

Product shall be tested according to Dianwei drawing and product specification.

适用 DIANWEI 质量检验，将其定义使用的可接受的质量标准的样品，尺寸及功能要求，按

WWW.DZYJZJ.COM WWW.DZYJZJ

照适用的产品图纸及规格要求进行检测。

6.5 Package & Shipment 出货准备：

Product should be adequately protected from damage by packaging material during product convey, which affects appearance and function of product

所有包装应予充分保护，以免运输过程中产品受损伤，从而影响产品外观及功能。

7. Product Notes 产品注意要点

7.1Storage Instruction 长时间保存时注意：

1）Storage place need control dust and moisture

保存场所注意防尘防潮。

2）Do not Store product near the object which could generate ammonia, sulfide gas.

请勿将产品置于氨气、硫化气体的产生源附近。

7.2 Use Instruction 使用注意事项

7.2.1 Operation Instruction 操作时的注意事项

1) Insert FPC in parallelly with connector, please note that contact point of connector is slightly prominent, if conductor of FPC do not engage with contact point properly, device will not transmit signal and operate smoothly.

FPC 排线平行插入，请注意，连接器的触点稍突出，如果不能正确插入使 FPC 排线导电部分与触点接触,端子信号不匹配导致设备将无法正常工作。

2) Need make sure that FPC is fully inserted, otherwise it will result contacting issue.

确认 FPC 排线完全插入，否则可能导致接触不良。

3）Do not use excessive force when insert/withdraw FPC cable, it may damage connector or result contacting issue.

拔插 FPC 排线时不要用力过大，否则可能导致连接器损坏或接触不良。

4）once lock cover separated from HSG body or broken, please do not use this product

一旦锁扣与主体发生脱离、断裂，该连接器请勿再使用。

5）when press down lock cover, fixed moderate position on both sides of connector with finger and ensure that use uniform force to press lock cover. If lock cover is not pressed down to right position, it may lead to contact issue.

下压锁扣时，请用手指头固定两边适中位置，确保锁扣完全平均受力下压，如果锁扣未完全下压，可能导致接触不良。

6）When press down lock cover, applied horizontal force(in parallel with PCB) is acceptable

下压锁扣时，可在水平方向（平行于基板的方向）用力。

7）When release lock cover, seized moderate position on both sides of connect with finger or entire of lock cover to flip up slowly. It may lead to damage or contacting issue, if only flip up lock cover unevenly

WWW.DZYJZJ.COM WWW.DZYJZJ

解除锁扣时，应同时抓住锁扣两端适中位置，或抓住整个锁扣慢慢掀起，不可仅掀起一边过多，这样会导致损坏及接触不良。

8）The following operation which may lead to connector damage, TML deforming and contacting issue should be taken to avoid when flip up lock cover, insert/withdraw FPC cable.

掀起锁扣、拔插 FPC 排线时，应注意避免以下可能导致连接器损坏、端子变形及接触不良的操作：

-- Pull out cable before lock cover released

未掀起锁扣就拔插 FPC 排线。

-- Cable is tilted at the direction of up and down, left and right when insert/withdraw cable

拔插 FPC 排线时在上下、左右方向发生倾斜。

7.3 Concerns on Designing 设计时的注意事项

1） Do not apply force to cable directly when assemble FPC cable with connector. Do not over-bend cable at the joint area between cable and connector, Ensure that cable do not withstand loading.

放置 FPC 排线时，不要直接对连接器施加力，不要在靠近连接器部份过度弯曲 FPC 排线，确认排线未被直接承受负荷。

2） Please fix FPC cable firmly if connector contact with vibrating component, or is the equipped components of mobile device, sites

连接器若持续与振动部位接触，或作为移动设备、活动场所的搭载部品，请固定好 FPC 排线。

3）Please use our recommended cable dimension.

请使用我们公司推荐的 FPC 排线式样尺寸。

If use other FFC cable, please contact with Dianwei customer service representative or write mail to sales@dianwei.cn

使用上述以外的 FFC 排线时，请垂询您的钿威客服代表或 E-mali: sales@dianwei.cn

4） When Design PCB board, please ensure that there are enough room for connector mounting and cable assembly

设计 PCB 基板的时候，请确保足够的空间，以及下压、掀开锁扣的操作空间。

7.4 Soldering instruction 焊接时的注意事项

1）Please use the recommended IR reflow temperature profile

请尽可能使用本公司推荐回流焊条件规格。

P.S: Reflow parameter will be changed depending on variance of Tin types, welding material, Tin thickness, PCB base and other welding material, please check and use the suitable reflow parameter before soldering.

注意：回流焊条件依赖于焊锡种类、焊接材料、焊锡量、焊接基板大小、其他焊接材料的不同而发生变化，实施回流焊之前请确认实际的焊接条件。

2） When using manual soldering process, please ensure that soldering parameter can make sure the soldering area is reliable

WWW.DZYJZJ.COM WWW.DZYJZJ

采用手工焊接时，请注意确保焊点接触可靠性焊接条件

Do not excessive welding, avoid flux remaining on the TML

请勿过度焊接，以免助焊剂残留到端子上

Do not use iron press on soldering part, avoid soldering part deforming.

请勿将焊接烙铁用力按压在焊接部位上，以免导致变形

Do not use iron heat outside of soldering area of TML, avoid soldering part deforming

请勿将焊接烙铁接触焊接部位以外的端子部位，以免发生变形

8. Commitment 本品使用承诺

Thank you for using Dianwei Technology products.

感谢使用钿威科技的产品。

Unless otherwise there are written assessment, agreement or illustration, the following clause and warrant will apply to Dianwei technology products.

除非另有书面评估、约定或说明，以下条件和保证信息将适用于钿威科技的产品。

订购钿威科技的产品包含这些条款和条件。

8.1 Warrant 保证内容

① Warranty Period 保证期限

Warranty period of solderability is 12months when product docked designated destination

保证（可焊性）期限为送达指定地点后的 12 个月内。

② Scope 保证范围

Within warranty period, Dianwei technology agree to offer free maintenance service or spare parts if the quality issue belong to our responsibility, but the responsibility do not take charge of the following situation:

保证期限内，发生本公司责任的故障，钿威科技将免费维修或提供备品。但不包含以下原因导致的问题：

a) Use product at circumstance other than those specified in this specification
在本规格书规定以外的环境条件下使用。

b) The issue do not result from Dianwei product
非本公司产品原因所导致的问题。

c) The modification, repairmen do not carry out by Dianwei
非本公司进行的改造、修理。

d) Beyond the design purpose use product
超出设计用途使用本公司产品。

e) The situation based on the current science and technology can not be predicted in advance when Dianwei ship out product
由于本公司产品发货时的科学技术水平所限，无法提前预知的原因。

f) Other situations such as natural disaster which situation Dianwei can not control

WWW.DZYJZJ.COM WWW.DZYJZJ

其他诸如自然环境灾害等本公司无法承担责任的情况。

8.2 Limitation of Liability 责任限定

For special, indirect damages which caused by Dianwei product, Dianwei do not take the responsibility

钿威科技对因本公司产品所发造成的特别损害、间接损害、消极损害等不承担责任。

8.3 Conditions of appropriated use 适当用途的条件

① When Dianwei and other company product combine to use in customer side, customer need take the responsibility to confirm that the product is suitable for customers system, mechanical devices and equipment.

钿威科技的产品和其他公司产品组合使用时，用户有责任确认符合适用的标准和规则。客户有责任确认本产品适用于客户使用的系统，机械装置和设备。

② When products are used in the following situations, please consult Dianwei customer service representative to ensure that Dainwei product performance have sufficient margin compared with customer application request, and have safety monitoring system such as safety circuits to minimize the risk in case breakdown take place.

在以下场合下使用时，请向钿威科技的客服代表咨询，以检查产品规格在性能等级上有足够的余量，以及适合的安全监测，如安全回路、万一故障发生时将危险降低到最小等。

a) Used in outdoor, the place with potential chemical contamination or electrical interference, or the environment which beyond specified specification

户外使用，存在潜在化学污染或电气干扰，或超出目录记载的条件、环境使用。

b) Used in nuclear reaction systems, railway systems, aviation, transportation equipment, medical equipment, entertainment equipment, safety devices, or standard equipment of government, industry

用于核反应系统、铁路系统、航空、交通设备、医疗器械、娱乐器械、安全装置，或政府、工业界标准设备。

c) Used in the systems, instruments and equipment which have dangerous effects on human life and property

对于人类生命财产存在危险影响的系统、器械、设备。

d) Used in the gas, water, electricity supply system and the system require 24H continuous operation, the system require high reliability

气、水、电供给系统，以及需要 24 小时连续运转的系统等，对可靠性要求高的系统。

e) Used in all above 4 situations, other application environment which require high security.

对应于以上 4 条，其他要求高度安全性的用途。

③ When Dianwei product is used those occasions which have a significant risk for human lives and property, customer must take full account that the system has been deigned to meet the needs of security, ensure that the design contains the hazard warning and has safty redundancy, make sure that the

WWW.DZYJZJ.COM WWW.DZYJZJ

connection and fix of product is properly to meet the intended purpose.

钿威科技的产品用于对人生命财产安全有重大风险的场合时，必须全面考虑系统设计已符合需要的安全性。确保设计中包含危险警示和安全冗余，确保本产品的连接及固定适当以符合预期用途。

④ Particular case shown in this specification is for reference only, the functionality, safety of equipment shall be confirmed before it is used.

目录中提供的具体事例仅供参考。装置设备实际使用前请确认其功能性、安全性。

③ In order to avoid unexpected damage to the user or other parties when Dianwei product is used, please make sure you understand and fully comply with all the relevant prohibitions and precautions.

为避免本公司产品在使用中发生不测造成用户或其他方的损害，请确保您已理解并充分遵守全部的有关禁令和注意事项。

④ The rating parameter specified in this document is determined in a separate experiment, it can not repeat the same result under complex conditions. The specification may be changed as product improvement as other reasons, please check the latest specification with Dianwei customer service representative before you purchase.

目录中记载了产品额定性能值，该数值在独立试验中测定，不能同时保证在复合条件下达到同样的表现值。为改进产品或其他原因可能修改目录中的规格和配件，购买时请与钿威的客服代表检查实际的产品规格。

产品规格书发行仅供参考，在实际使用前请和钿威客服代表咨询已确认最新版的产品规格书

9. Recommended FPC cable 推荐的 FPC 排线结构

Part Name 品名	Material 材料	
Base Film 带基薄膜	Polyimide 聚酰亚胺	t=25μm
Copper Foil 铜箔	Copper foil plate Gold(under plate Nickel) 铜箔 镀金（下层镀镍）	t=35μm Gold plating 0.1μm Min.
Cover Film 覆盖膜	Polyimide 聚酰亚胺	t=25μm
Stiffener 补强材	polyethylene glycol terephthalate 聚对苯二甲酸乙二醇酯 Polyimide 聚酰亚胺	t=188μm Min. t=175μm Min.
Note: Recommended FPC thickness: 0.3±0.02mm 注：适合的 FPC 厚度：0.3±0.02mm		

WWW.DZYJZ1.COM WWW.DZYJZ1