FPC/FFC connectors For FPC/FFC RoHS

Y5B/Y5BW (0.5 mm pitch)

Pitch 0.5 mm, low profile/space saving and double top and bottom contacts construction

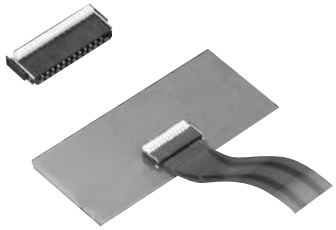

*V-by-One®HS: An interface for the next-generation high-speed signals developed by THine Electronics, Inc. V-by-One® is a registered trademark of THine Electronics, Inc.

FEATURES

- Double top and bottom contacts construction
- Wiring patterns can be placed under the connector
- Time and effort can be reduced by delivering with lever open
- Lock hold type (Y5BW) with excellent holding force is available (Y5BW: support only FPC)
- Supports high speed transmission standard V-by-One® HS. of THine Electronics, Inc.
- Models that support an ambient temperature of 105°C are also available.
  (For more information, please contact our sales representative.)

TYPICAL APPLICATIONS

- Mobile devices and industrial equipment

DETAILS FEATURES

■Low profile and space saving design

Low profile and space saving design of 1.00 mm high and 3.20 mm deep (3.70 mm with lever)

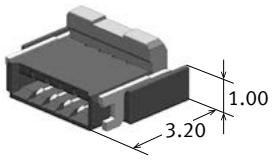

4 pins (Y5B: minimum)

■Lock hold type (Y5BW) is also available

The FPC holding contacts located on both ends of the connector facilitate positioning of FPC and further enhance the FPC holding force.

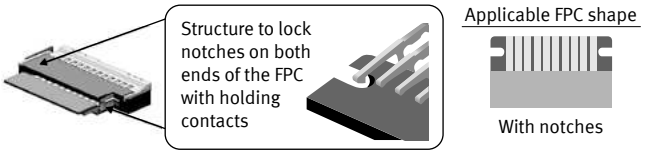

Notes: 1. The inserted FPC can be temporarily held until the lever is closed.
2. When the lever is closed, the holding contacts lock the FPC by its notches, enhancing the FPC holding force.

■Prevent displacement of FPC insertion

Constructed to make positional displacement difficult by surrounding the four sides on the FPC inlet side with wall molding

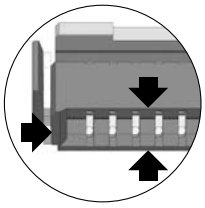

WWW.DZYJZ.COM

ORDERING INFORMATION (PART NO.)

■Y5B

AYF 53 ___ 3 5 _

- 53: 0.5 mm pitch Back lock
- Number of pins (2 digits)
- Function 3: Top and bottom double contacts
- Surface treatment (Contact portion / Terminal portion) 5: Au plating/Au plating (Ni barrier)
- Packing Nil : 5,000 pieces embossed tape and plastic reel × 2

■Y5BW

AYF 53 ___ 6 5 T _

- 53: 0.5 mm pitch Back lock
- Number of pins (2 digits)
- Function 6: Top and bottom double contacts and lock hold type
- Surface treatment (Contact portion / Terminal portion) 5: Au plating/Au plating (Ni barrier)
- Packing Nil : 5,000 pieces embossed tape and plastic reel × 2

PRODUCT TYPES

■Y5B

Height	Number of pins	Part No.	Standard packing	
			Inner carton (1-reel)	Outer carton
1.0 mm	4	AYF530435	5,000 pcs.	10,000 pcs.
	5	AYF530535		
	6	AYF530635		
	8	AYF530835		
	10	AYF531035		
	12	AYF531235		
	14	AYF531435		
	16	AYF531635		
	24	AYF532435		
	28	AYF532835		
	30	AYF533035		
	32	AYF533235		
	34	AYF533435		

Notes: 1. Order unit: For volume production: 1-inner carton (1-reel) units. For samples, please contact our sales representative.
2. Please contact our sales representative for connectors having a number of pins other than those listed above.

■Y5BW

Height	Number of pins	Part No.	Standard packing	
			Inner carton (1-reel)	Outer carton
1.0 mm	2	AYF530265T	5,000 pcs.	10,000 pcs.
	3	AYF530365T		
	4	AYF530465T		
	6	AYF530665T		
	8	AYF530865T		
	10	AYF531065T		
	12	AYF531265T		
	14	AYF531465T		
	22	AYF532265T		
	26	AYF532665T		
	28	AYF532865T		
	30	AYF533065T		
	32	AYF533265T		

Notes: 1. Order unit: For volume production: 1-inner carton (1-reel) units. For samples, please contact our sales representative.
2. Please contact our sales representative for connectors having a number of pins other than those listed above.

www.DZJ.com

©Panasonic Corporation 2021

SPECIFICATIONS

■Characteristics

The followings show specifications, when using an applicable FPC (thickness 0.30 mm)

Item		Specifications	Conditions
Electrical characteristics	Rated current	0.5 A/pin contact (except for holding contact)	
	Rated voltage	50 V AC/DC	
	Dielectric strength	250 V AC for 1 min.	No short-circuiting or damage at a detection current of 1 mA when the specified voltage is applied for one minute.
	Insulation resistance	Min. 1,000 MΩ (initial)	Using 250 V DC megger (applied for 1 min.)
	Contact resistance	Max. 100 mΩ	Based on the contact resistance measurement method specified by JIS C 5402.
Mechanical characteristics	FPC/FFC holding force	Y5B: Min. 0.2 N/pin contact × pin contacts (initial) Y5BW: Min. 0.2 N/pin contact × pin contacts + 2.0 N (initial)	Measurement of the maximum force applied until the inserted compatible FPC is pulled out in the insertion axis direction while the connector lever is closed
Environmental characteristics	Ambient temperature	-55 to +85°C*	No icing. No condensation.
	Soldering heat resistance	The initial specification must be satisfied electrically and mechanically.	Reflow soldering: Peak temperature: 260°C or less (on the surface of the PC board around the connector terminals) Soldering iron: 300°C within 5 sec. 350°C within 3 sec.
	Storage temperature	-55 to +85°C (product only) -40 to +50°C (emboss packing)	No icing. No condensation.
	Thermal shock resistance (with FPC mated)	5 cycles, insulation resistance Min. 100 MΩ, contact resistance Max. 100 mΩ	Conformed to MIL-STD-202F, method 107G Order / Temperature (℃) / Time (minutes) 1 / -55^{0}_{-3} / 30 2 / ~ / Max. 5 3 / 85^{+3}_{0} / 30 4 / ~ / Max. 5 -55^{0}_{-3}
	Humidity resistance (with FPC mated)	120 hours, insulation resistance Min. 100 MΩ, contact resistance Max. 100 mΩ	Conformed to IEC60068-2-78 Temperature 40±2°C, humidity 90 to 95% RH
	Saltwater spray resistance (with FPC mated)	24 hours, insulation resistance Min. 100 MΩ, contact resistance Max. 100 mΩ	Conformed to IEC60068-2-11 Temperature 35±2°C, saltwater concentration 5±1%
	H_2S resistance (with FPC mated)	48 hours, contact resistance Max. 100 mΩ	Temperature 40±2°C, gas concentration 3±1 ppm, humidity 75 to 80% RH
Lifetime characteristics	Insertion and removal life	20 times	Repeated insertion and removal: Min. 10 sec./time
Unit weight		Y5B 34 pins: 0.11 g Y5W 32 pins: 0.11 g	

*There are also products prepared for -55 to +105°C of use ambient temperature. For details, please contact our sales representative.

■Material and surface treatment

Part name	Material	Surface treatment
Molded portion	Housing: LCP resin (UL94V-0) Lever: LCP resin (UL94V-0)	–
Contact	Copper alloy	Contact portion; Base: Ni plating, Surface: Au plating Terminal portion; Base: Ni plating, Surface: Au plating
Holding contact (Only Y5BW)	Copper alloy	Terminal portion; Base: Ni plating, Surface: Au plating
Soldering terminal	Copper alloy	Base: Ni plating, Surface: Au plating

WWW.DZYJZ.COM

©Panasonic Corporation 2021

DIMENSIONS CAD The CAD data of the products with a "CAD" mark can be downloaded from our Website. Unit: mm

■Y5B

CAD

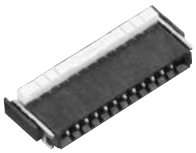

External dimensions

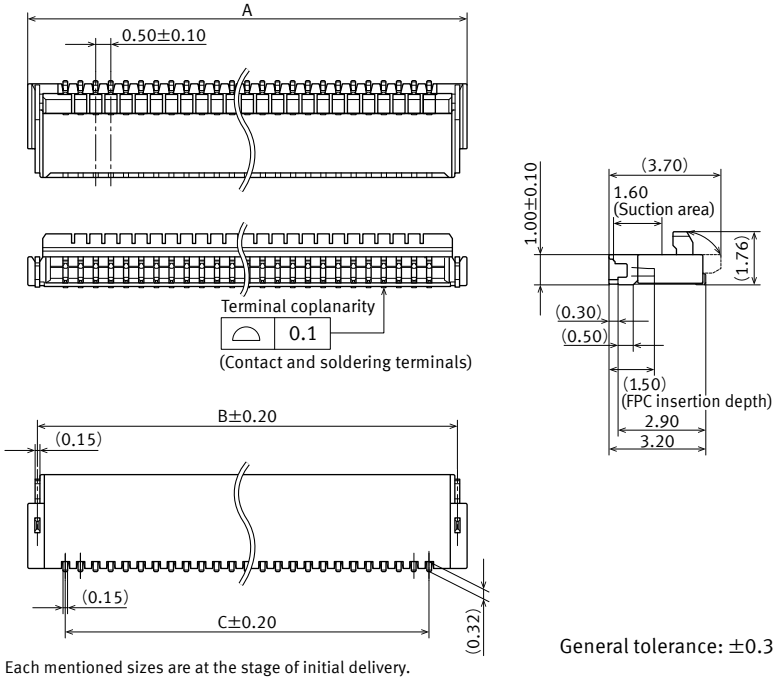

Each mentioned sizes are at the stage of initial delivery.

General tolerance: ±0.3

Dimension table

Number of pins \ Dimensions	A	B	C
4	4.00	3.36	1.50
5	4.50	3.86	2.00
6	5.00	4.36	2.50
8	6.00	5.36	3.50
10	7.00	6.36	4.50
12	8.00	7.36	5.50
14	9.00	8.36	6.50
16	10.00	9.36	7.50
24	14.00	13.36	11.50
28	16.00	15.36	13.50
30	17.00	16.36	14.50
32	18.00	17.36	15.50
34	19.00	18.36	16.50

■Y5B Recommended FPC/FFC dimensions

(Finished thickness: t = 0.3±0.03)

The conductive parts should be based by Ni plating and then Au plating.

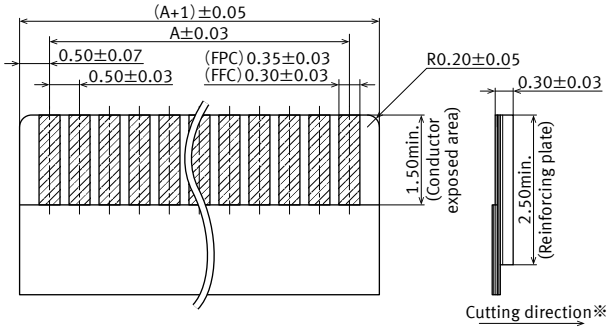

※Cut FPC/FFC from the copper foil side to the reinforcing plate side.

Dimension table

Number of pins \ Dimensions	A
4	1.50
5	2.00
6	2.50
8	3.50
10	4.50
12	5.50
14	6.50
16	7.50
24	11.50
28	13.50
30	14.50
32	15.50
34	16.50

WWW.DZYJZ

©Panasonic Corporation 2021

■Y5BW

CAD

External dimensions

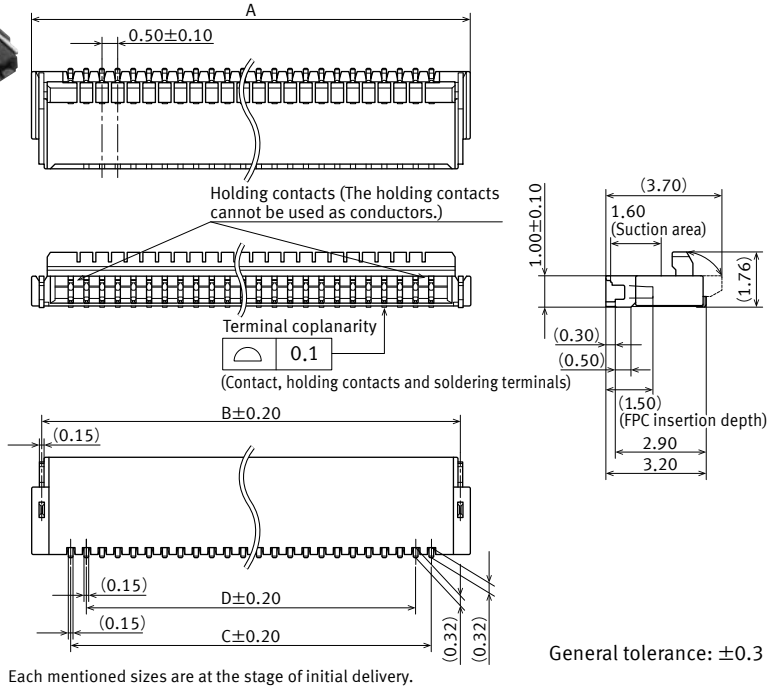

Each mentioned sizes are at the stage of initial delivery.

General tolerance: ±0.3

Dimension table

Number of pins \ Dimensions	A	B	C	D
2	4.00	3.36	1.50	0.50
3	4.50	3.86	2.00	1.00
4	5.00	4.36	2.50	1.50
6	6.00	5.36	3.50	2.50
8	7.00	6.36	4.50	3.50
10	8.00	7.36	5.50	4.50
12	9.00	8.36	6.50	5.50
14	10.00	9.36	7.50	6.50
22	14.00	13.36	11.50	10.50
26	16.00	15.36	13.50	12.50
28	17.00	16.36	14.50	13.50
30	18.00	17.36	15.50	14.50
32	19.00	18.36	16.50	15.50

■Y5BW Recommended FPC dimensions

(Finished thickness: t = 0.3±0.03)

The conductive parts should be based by Ni plating and then Au plating.

Notch type

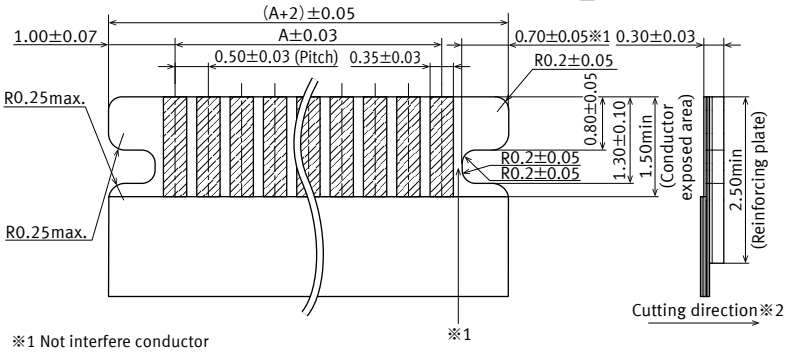

※1 Not interfere conductor
※2 Cut FPC from the copper foil side to the reinforcing plate side.

Dimension table

Number of pins \ Dimensions	A
2	0.50
3	1.00
4	1.50
6	2.50
8	3.50
10	4.50
12	5.50
14	6.50
22	10.50
26	12.50
28	13.50
30	14.50
32	15.50

WWW.DZYJZ

©Panasonic Corporation 2021

EMBOSSED TAPE DIMENSIONS

Unit: mm

■Specifications for taping

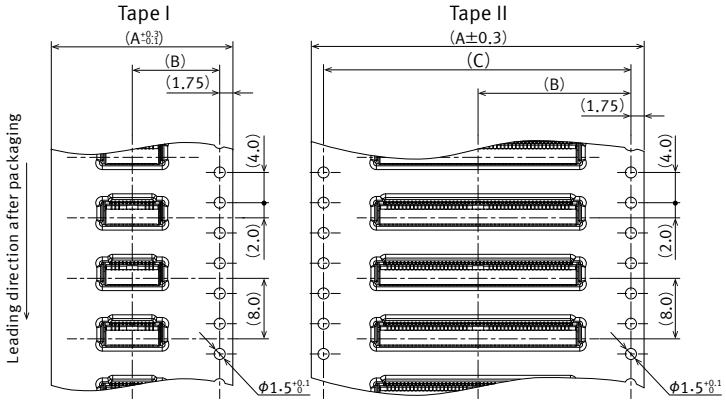

■Specifications for the plastic reel

In accordance with EIAJ ET-7200B.

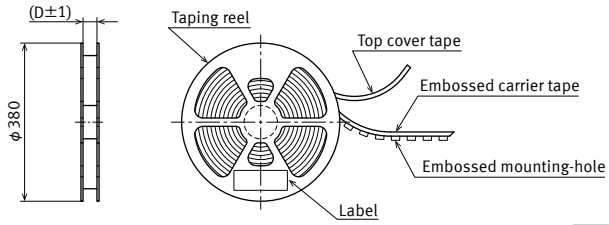

■Dimension table

●Y5B

Number of pins	Type of taping	A	B	C	D	Quantity per reel
4 to 10	Tape I	16.0	7.5	-	17.4	5,000
12 to 30	Tape I	24.0	11.5	-	25.4	5,000
32 to 34	Tape II	32.0	14.2	28.4	33.4	5,000

●Y5BW

Number of pins	Type of taping	A	B	C	D	Quantity per reel
2 to 8	Tape I	16.0	7.5	-	17.4	5,000
10 to 28	Tape I	24.0	11.5	-	25.4	5,000
30 to 32	Tape II	32.0	14.2	28.4	33.4	5,000

■Connector orientation with respect to embossed tape feeding direction

Type / Direction of tape progress	Y5B/Y5BW
↓	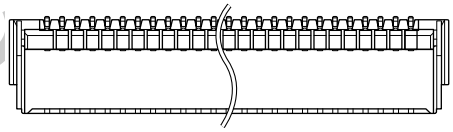

WWW.DZYJZJ.COM

©Panasonic Corporation 2021

NOTES Unit: mm

■ **Design of PC board patterns**

Conduct the recommended foot pattern design, in order to preserve the mechanical strength of terminal solder areas.

■ **Recommended PC board and metal mask patterns**

Connectors are mounted with high pitch density, intervals of 0.4 mm, 0.5 mm or 0.6 mm. In order to reduce solder and flux rise, solder bridges and other issues make sure the proper levels of solder is used.

The figures are recommended patterns. Please use them as a reference.

● Recommended PC board pattern
(mounting layout)

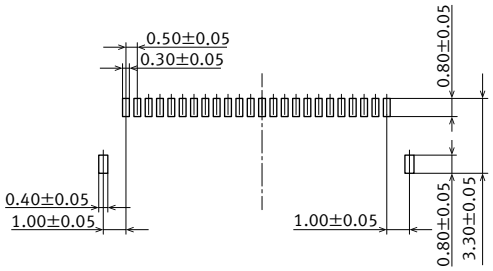

● Recommended metal mask pattern
Metal mask thickness: When 120 μm
(Terminal opening ratio: 57%)
(Metal-part opening ratio: 100%)

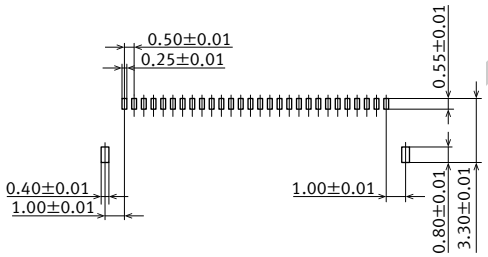

Please refer to **"the latest product specifications"** when designing your product.
•Requests to customers:
https://industrial.panasonic.com/ac/e/salespolicies/

WWW.DZYJZJ.COM

©Panasonic Corporation 2021

Notes on Using FPC/FFC Connectors

About safety remarks

- Do not use these connectors beyond the specification sheets. The usage outside of specified rated current, dielectric strength,and environmental conditions and so on may cause circuitry damage via abnormal heating, smoke, and fire.
- In order to avoid accidents, your thorough specification review is appreciated. Please contact our sales representative if your usage is out of the specifications. Otherwise, Panasonic Corporation cannot guarantee the quality and reliability.
- Panasonic Corporation is consistently striving to improve quality and reliability. However, the fact remains that electrical components and devices generally cause failures at a given statistical probability. Furthermore, their durability varies with use environments or use conditions. In this respect, please check for actual electrical components and devices under actual conditions before use. Continued usage in a state of degraded condition may cause the deteriorated insulation, thus result in abnormal heat, smoke or firing. Please carry out safety design and periodic maintenance including redundancy design, design for fire spread prevention, and design for malfunction prevention so that no accidents resulting in injury or death, fire accidents, or social damage will be caused as a result of failure of the products or ending life of the products.

PC board design

- Design the recommended foot pattern in order to secure the mechanical strength in the soldered areas of the terminal.
- In order to facilitate the connector mount, make sure to design the board with reduced warpage.
- Please design and pay attention to the distance from the board edge to the pattern. When cutting the board, do not give an excessive stress to the connector, which risks damaging the connector.
- Y5BW
  Depending on FPC/FFC dimension and FPC/FFC insertion location, there is a possibility that the holding contact and an FPC/FFC pattern of both end of signal contacts are in shortcircuited. Please design the equipment not to be affected even if a board pattern of holding contacts and an FPC/FFC pattern of both end of signal contacts are in short-circuited.
  (For example: Do not connect a board pattern of holding contacts and GND. If connect a board pattern of holding contacts and GND, also connect board pattern of both end of signal contacts.)

FPC/FFC and equipment design

- Design the FPC/FFC based with recommended dimensions to ensure the required connector performance.
- When back lock type is used, secure enough space for closing the lever and for open-close operation of the lever.
- Make sure that connector positioning and FPC/FFC length are appropriate to prevent diagonal insertion of the FPC/FFC.
- Due to the FPC/FFC size, weight, or the reaction force of the routed FPC/FFC, FPC/FFC removed and connector deformation may occur by a fall, vibration, or other impact. When using FPC/FFC connector for smart phones, cellular phones and other applications which require falling resistance, please pay attention to precautions.
- Carefully check the equipment design and take required measures to prevent the FPC/FFC removed.
- If the shock of falling, vibration is applied to the FPC/FFC, please design the equipment not to be applied a load to connector, such as fixing the FPC/FFC.
- Make sure to design the FPC/FFC insertion part with reduced warpage. Otherwise, the warpage may adversely affect the FPC/FFC insertion.
- Y5BH
  When using in high-speed transmission applications, please take care when designing the FPC/FFC, because the differential impedance values may be uneven depending on FPC/FFC dimensions settings, uneven dimensions, and layering composition.
- Y5BW
  The holding contacts cannot be used as conductors.
  The holding contacts are located on both ends of the connector, and the shape of the soldered portions is the same as that of the signal contacts. Use caution to ensure connect identification.

Connector mounting

- Excessive mounter chucking force may deform the molded or metal part of the connector. Consult us in advance if chucking is to be applied.
- In case of dry condition, please note the occurrence of static electricity. The product may be adhered to the embossed carrier tape or the cover tape in dry condition. Recommended humidity is from 40 to 60%RH and please remove static electricity by ionizer in manufacturing process.

WWW.DZYJZ.COM WWW.DZYJZ

©Panasonic Corporation 2021

Soldering

■ Manual soldering

- As this product is compact size, please avoid the excessive solder. Because the excessive solder makes creepage and flux wicking at contact portion, or impact contact by soldering interference.
- Please use the soldering iron under specified temperature and times.
- Soldering flux may contaminate the contact portion, please check the contact portion after soldering with a magnifying glass. If the contamination is found, please clean the contamination before use.
- As excessive force to terminal by manual soldering has some possibilities of contact portion deformation, please be careful to the force by hand.
- Please clean soldering iron tip.

■ Reflow soldering

- When cream solder printing is used, screen method is recommended.
- To achieve the appropriate soldering state, make sure that the reflow temperature, PC board foot pattern, window size and thickness of metal mask are recommended condition.
- Note that excess solder on the terminals prevents complete insertion of the FPC/FFC, and causes flux climbing up.
- A screen thickness of 120μm is recommended during cream solder printing.
- When applying the different thickness of a screen, please contact our sales representative.
- There may be a case of difficult self-alignment depending on the connector size. In that case, please be careful to align terminals and solder pads.
- The following diagram shows the recommended reflow soldering temperature profile.

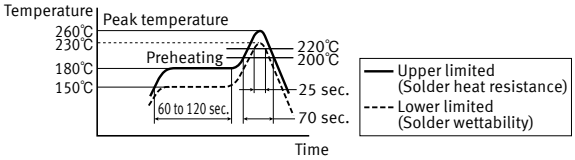

- Infrared reflow soldering is able to passed two times.
- The temperature is measured on the PC board surface near connector terminals.
- The condition of solder or flux creepage and wettability depend on the type of solder and flux. Please set the reflow temperature and oxygen level by considering the solder and flux characteristics.
- Do not use resin-containing solder. Otherwise, the contacts might be firmly fixed.
- When performing reflow soldering on the back of the PC board after reflow soldering the connector, secure the connector using, for example, an adhesive.
  (Double reflow soldering on the same side is possible.)
  Do not apply reflow heating while a lever is closing (or on the way of closing)
  The terminals may be deformed by reflow heating with a lever is closing (or on the way of closing).

■ Rework of soldering portion.

- Rework shall be only one time.
- Please avoid the supplementary flux in case of rework for soldering bridge, as this may cause flux creepage to contact portion.
  When adding the solder for reworking, do not add an excessive solder.
- Please use the soldering iron under specified temperature.

■ As the excessive force on the terminals may cause the deformation and the integrity of solderability will be lost during reflow soldering, please avoid dropping or rough handling of the product.

■ When the soldering is not completed, do not open/close the lever or insert/remove an FPC/FFC. And the external compulsory force to the terminal may cause the fixing force lowering between the terminal and the molding or the coplanarity failures. In addition, do not insert an FPC/FFC into the connector before soldering the connector.

■ When cutting or bending the PC board after mounting the connector, please avoid the stress at the soldering portion.

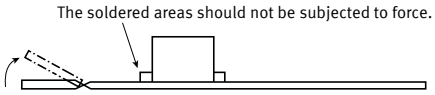

PC board

- As thick coverlay/solder resist and adhesive may cause poor soldering, please set thickness of coverlay and adhesive as thin as possible.

WWW.DZYJZJ.COM

©Panasonic Corporation 2021

Precautions for insertion/removal of FPC/FFC

- Avoid touching the lever (applying any external force) until an FPC/FFC is inserted. Do not open/close the lever without an FPC/FFC inserted. Failure to follow this instruction will cause the contacts to warp, leading to the contact tips to interfere with the insertion of an FPC/FFC, deforming the terminals. Failure to follow this instruction may cause the lever to be removed, terminals to be deformed, and/or the FPC/FFC insertion force to increase.

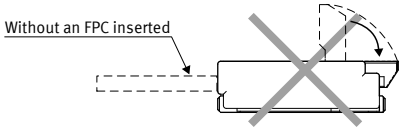

- These connectors are of the back lock type, which has the FPC/FFC insertion section on the opposite side of the lever. Be careful not to make a mistake in the FPC/FFC insertion position or the lever opening/closing position. Otherwise, a contact failure or connector breakage may occur.
- Do not insert an FPC/FFC upside down. Inserting an FPC/ FFC in a direction opposite to that you intended may cause an operation failure or malfunction.
- Insert an FPC/FFC with the lever opened at right angle, that is, in the factory default position.
- After checking the position of FPC/FFC insertion slot and FPC/FFC, completely insert the FPC/FFC horizontally to the full depth of the connector without altering the angle. An FPC/FFC inserted at an excessive angle to the board may cause the deformation of metal parts, crack of molding parts, FPC/FFC insertion failures, and FPC/FFC circuit breakages.

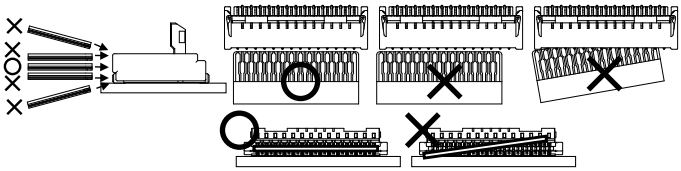

- Insert the FPC/FFC into the connector after checking the position of FPC/FFC insertion slot and FPC/FFC. Do not insert the FPC/FFC without positioning the FPC/FFC and connector. Otherwise, it may cause connector breakages. When it is hard to insert the FPC/FFC, do not insert the FPC/FFC on that condition. Confirm the FPC/FFC and connector positioning.
- Do not apply an excessive load to the lever in the opening direction beyond its open position; otherwise, the lever may be deformed or removed.
- Do not apply an excessive load to the lever in a direction perpendicular to the lever rotation axis or in the lever opening direction; otherwise, the terminals may be deformed, and the lever may be removed.

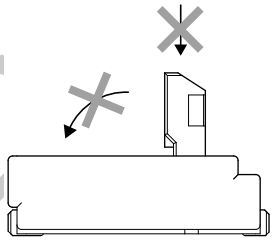

- To close the lever, turn down the lever by pressing the entire lever or both sides of the lever with fingers tips. And close the lever completely. Be careful not to apply partial load to the lever that may cause its deformation or destruction or lever going back to initial position. Close the lever completely to prevent contact failure.
- Avoid applying an excessive load to the top of the lever during or after closing the lever. Otherwise, the terminals may be deformed.
- When opening the lever to remove the FPC/FFC, rotate the lever to the initial position. Do not push the lever into the FPC/FFC inlet side and ensure that the lever will not go over the initial position; otherwise, it may be deformed or broken.
- To open the lever, if pressure to the lever is applied unevenly, such as to an edge only, it may deform or break.
- Do not open the lever forcefully with something sharp tool, otherwise, the lever may be deformed.
- Remove the FPC/FFC at parallel with the lever fully opened. If the lever is closed, or if the FPC/FFC is forcedly pulled, the product or FPC/FFC may break.
- If a lever is accidentally detached during the handling of a connector, do not use the connector any longer.

■ After an FPC/FFC is inserted, carefully handle it so as not to apply excessive stress to the base of the FPC/FFC. When using FPC/FFC with a bent condition, please pay attention to precautions below; otherwise, in some conditions it may cause conduction failure, connector breakage, unlocking lever or FPC/FFC disconnection.

- Design so that a load is not applied to connector directly by FPC/FFC bending.
- Avoid sharp FPC/FFC bending at the root of FPC/FFC insertion part.
- Design so that a load is not applied to the part of FPC/FFC bending.
- If there might be a load on FPC/FFC, please fix the FPC/ FFC.
- Y5BW
  Fix the FPC/FFC if there might be a load to the cut out, do not apply bending load to the cutout part of FPC/FFC. Otherwise, it may cause FPC/FFC disconnection and deformation since the cutout part of FPC/FFC is subjected to bending stress.

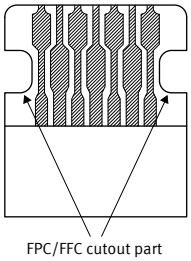

Cleaning treatment

Cleaning this product is not needed basically.
Please note the following points to prevent the negative effect to the product when cleaning is necessary.

- Please keep the cleanliness of the cleaning fluid to make sure that the contact surfaces are not contaminated by the cleaning fluid itself.
- Semi-aqueous cleaning solvent is recommended as some powerful solvent may dissolve the molding portion or the marked letters. Please contact our sales representative when other solvent is used.

WWW.DZYJZJ.COM

©Panasonic Corporation 2021

Precautions for operating environment and storage environment

- Panasonic Corporation does not guarantee the failures caused by condensation.

Other precautions

- When the coating material is used for preventing PC board isolation deterioration after soldering, please assure the coating material is not adhered on any part of connector.
- Please avoid the usage of connector as electric switching basically.
- There is no problem on the product quality though the swelling, the black spot, the small scars and the foreign matter, etc. might be generated in the molding parts.
- There is no problem on the product quality though the weld line might be generated in the weld part of molding parts when the use of product is within the specifications.
- The detailed shape of metal parts and molding parts may differ depending on the mold.
- Height in FPC/FFC mating depends on the way to being used, such as mounting condition, thickness of FPC/FFC, and angle of lever lock etc. Please check it by actual equipment.

Please refer to **"the latest product specifications"** when designing your product.
•Requests to customers:
https://industrial.panasonic.com/ac/e/salespolicies/

WWW.DZYJZJ.COM WWW.DZYJZJ

©Panasonic Corporation 2021

WWW.DZYJZJ.COM WWW.DZYJZ

Please contact .....

Panasonic Corporation
Electromechanical Control Business Division
■1006, Oaza Kadoma, Kadoma-shi, Osaka 571-8506, Japan
industral.panasonic.com/ac/e/

Panasonic®

©Panasonic Corporation 2021

ACCTB1E 202110

Specifications are subject to change without notice.