PRODUCT NO.	RoHS compliant
DSWB07LHGETB	

REV.	ECN NO.	DR	DATE

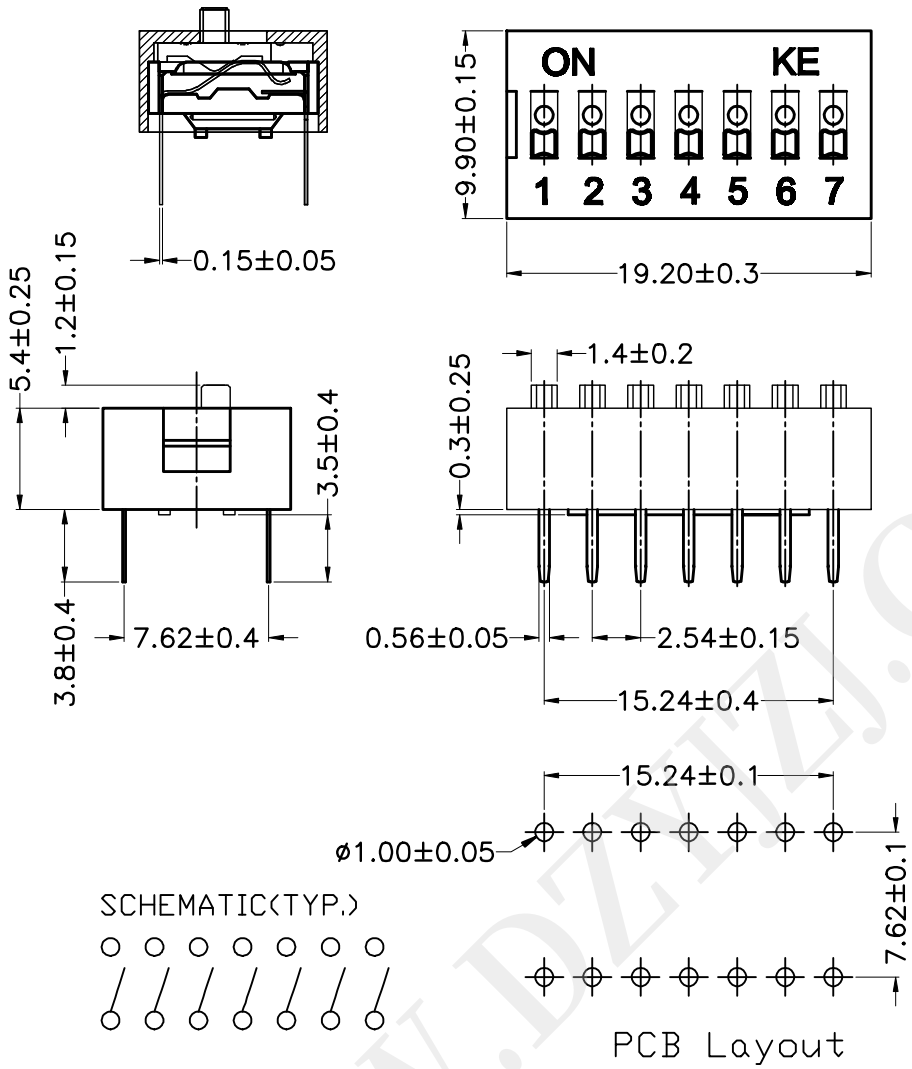

Note:

1. All dimensions are in millimeters.
2. General tolerance: ±0.2mm.
3. Material:
   - Base: UL94V-0 PBT Thermoplastic (Black).
   - Cover: UL94V-0 PBT Thermoplastic (Black/Red/Blue).
   - Actuators: UL94V-0 PBT Thermoplastic (White).
   - Contact plating: Gold plating over nickel.
   - Pitting material: Epoxy.
4. Electrical
   - Electrical: 2000 Operations per switch 24/VDC, 25mA.
   - Non-Swithing Rating: 100mA, 50/VDC.
   - Swithing Rating: 25mA, 24/VDC
   - Contact Resistance: 100 mΩ Max. at initial.
5. Mechanical
   - Mechanical life: 2000 Operations per switch.
   - Stroke: 2.0mm.
   - Operation Temp: -20℃ to 70℃.
   - Storage Temp: -40℃ to 85℃.
6. PART NUMBER DESCRIPTION:

DS WB 07 L H G E T B

- [Color of Cover: R=Red B=Blue K=Black]
- [Packing: T=Tube R=Reel]
- [Finish: E=1 μ"-3 μ" Gold-plated F=10 μ" Gold-plated]
- [Finish: G=Full Gold S=Contat-Gold-plated, Terminal-Tin-Plated]
- [Terminal: S=SMD type H=Straight.....]
- [Actuator: T=Tape sealed S=Low profile W/O Tape L=Extension]
- [HP=Half-Pitch IC=IC type PV=Piano type WB=WB type]

注意：

1. 波峰焊：推荐焊锡温度在270℃±5℃，浸锡时间为5~6秒钟。
2. 手工焊：使用30瓦烙铁控制温度在320℃，焊接时间大约2~3秒钟。
3. 拨柄位置：产品焊接时，请将产品的拨柄置于OFF端，能给予产品更好的接触性能。
4. 清洗过程：清洗使用超音波方式，能给予更好的效果。

TOLERANCE UNLESS OTHERWISE SPECIFIED		INSPECTION COPY
LINER	ANGLES	
.0 ± 0.30	0. ± 1°	PROJECTION
.00 ± 0.20	.0 ± 0.5°	
.000± 0.10	.00±	
DESIGN	LU ER XIN	2013/07/02
DRAWING		
CHECK		
APPRO.		

东莞市广督实业有限公司
DongGuan Kingtek Industrial Co., Ltd.

TITLE: BY DSWB SERIES PITCH 2.54mm

PRODUCT FAMILY: DSWB SERIES

PRAT NO.: DSWB07LHGETB

FILE NO.: DSWB07LHGETB-A

SIZE	UNIT	SCALE	SHEET	REV.
A4	mm	FIT	1 OF 1	A

WWW.DZYTZJ.COM