EDG(RA 33) DIP SWITCH

1. FEATURES:

1-1. Tactile response is performed directly by larger contact pressure to ensure very stable contact.

1-2. All plastic are UL 94V-0 grade five retardant.

1-3. Bottom epoxy sealed standard to ensure free of flux immersion during wave soldering.

1-4. Contact wiping on make and break.

1-5. Gold, Silver or Tin plated contacts to ensure low contact resistance and long mechanical life.

1-6. Ideal for data processing, communications, remote controls and burglar alarm system use, where manual programming is required.

1-7. RoHS Compliant

2. SPECIFICATIONS:

2-1. ELECTRICAL

2-1-1. Contact rating

switching	25 mA, 24 VDC
non-switching	100 mA

2-1-2. Contact resistance

initial	50 mΩ Max.
after life test	100 mΩ Max.

2-1-3. Insulation resistance 1,000 MΩ Min. at 100 VDC

2-1-4. Dielectric strength 500 VDC Min. for 60 seconds

2-1-5. Capacitance between adjacent switches 5 pF Max.

2-2. MECHANICAL AND ENVIRONMENTAL

2-2-1. Temperature rating

operating -25℃ to + 70℃

storage -40℃ to + 85℃

2-2-2. Operation force 800g Max. (SPST only)

2-2-3. Mechanical life 2,000 Operations

2-2-4. Humidity 95% RH, 40℃ for 96 Hrs.

2-2-5. Vibration 10Hz-55Hz-10Hz for 6 Hrs.

2-2-6. Solderability After flux 230±5℃ for 5±0.5 seconds 95% coverage

2-2-7. Resistance to soldering heat 260±5℃ for 5±1 seconds.

3. OPTIONS:

3-1. Special top or side marking available.

3-2. Right angle for spst 1-12 positions.

3-3. Low profile actuator.

3-4. Low profile actuator plus top tape sealed.

4. PART NUMBERING SYSTEM

EDG 1 X S RA X XX

- XX — Special product number:
  33 : Contact (Gold Plated) / Terminal (Tin Plated)
- X — Blank : Without Tape Sealed
  T : With Tape Sealed
- RA — Right Angle
- S — Actuator and Sealing
  S: Standard
  L: Low Profile Actuator
- X — Number of positions:
  As dimensions and circuitry
- 1 — Contact Forms:
  1. SPST 2. DPST
  4. 3PST 5. 4PST
- EDG — Type Name:
  EDG: Gold Plated Contacts

5. PACKING

5-1. PACKING METHOD

All switches are packed into IC tubes as an inner packing unit, then ten tubes are bundles together with rubber bands.
Length of IC tube: 560 mm (EDG 1 pole only: 280 mm).

5-2. INFORMATION ON LABEL (stuck to each bundle of IC tubes).

(1) DESCRIPTION.
(2) LOT NO.
(3) QUANTITY.
(4) TESTER NO.
(5) ECE MARK.
(6) WARNING.
(7) QC STAMP.
(8) DATE.
(9) MANUFACTURERS NAME.

6. DRAWINGS

Dip switch dimensions: see attached drawing.

Circuit diagram: see attached drawing

P.C.B. layout diagram: see attached drawing.

7. WARNING

Please keep contacts in OFF position during wave soldering.

EDG/EDS SPST-RA DIMENSIONS

Unit:mm(inch)

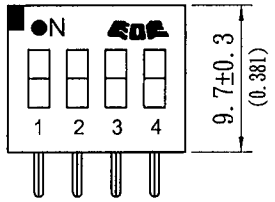

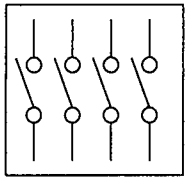

P.C.B LAY OUT FOR

RIGHT ANGLE TYPE ONLY

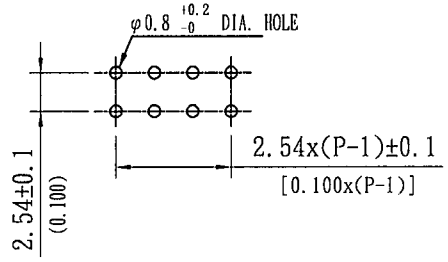

Right angle type

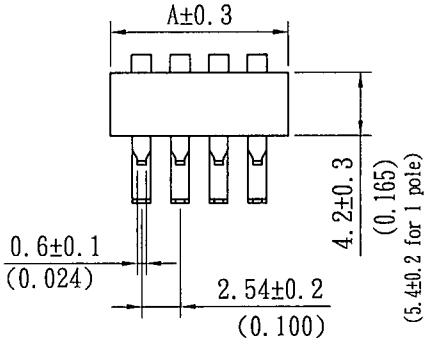

Low profile type

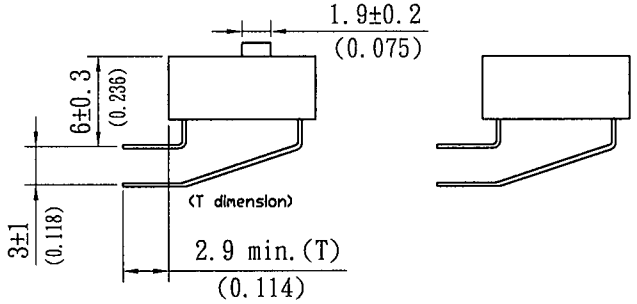

CONSTRUCTION

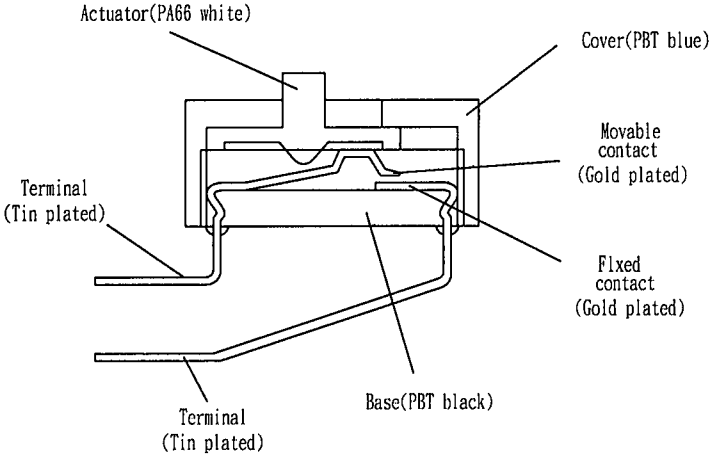

Dimension A

Positions	3	4	5	6	7	8	9	10	12
A	9.2 (0.362)	11.7 (0.461)	14.2 (0.559)	16.7 (0.657)	19.2 (0.756)	21.7 (0.854)	24.2 (0.953)	26.7 (1.051)	31.8 (1.252)

Remark: 3 position switches don't have the "ECE" Mark.

NO.	DETAILS	ALTERED BY	DATE

NORMAL TOLERANCE	
RANGE	TOLERANCE
0-1	±0.1
1-4	±0.3
4-16	±0.5
16-63	±0.8
63-250	±1.0
X.	±5°
X.X	±2.5°

EXCEL CELL ELECTRONIC CO., LTD.

CHECK	Gary (2016.12.27)	DESIGN	P.C.L	DRAWN	Marcus (2016.12.27)	UNIT	MM (INCH)	PART NUMBER	EDG1XXS(L)RA33
						SCALE	2:1	PART NAME	EDG
						SIZE	A4	TYPE	SPST-RA
						PROJECTION		FILE NAME	7041XX3133A.DWG
								EDITION	A