Specifications

备注(Remark)
1.材料(MATERIAL)
胶芯：PA9T新料+30%G.F UL94V-0，颜色:黑色.
Housing:PA9T新料+30%G.F UL94V-0,Color:Black
端子：磷铜，镍底50u"MIN,表面镀金1u"MIN
Contact:Phosphor bronze,1u"MIN GOLD PLATING OVER ALL
50u" MIN NICKEL UNDERPLATING OVER ALL
2.特性 (characteristics):
额定电流：3 AMP
Raring Current:3 AMP.
接触阻抗：20 mΩ MAX.
Contact Resistance:20 mΩ MAX.
绝缘阻抗：1000 MΩ MIN.
Insulating Resistance:1000 MΩ MIN.
耐电压：AC 1000V.
Withstanding Voltage:AC 1000V.
温度范围：-40° C to+105° C
Temperture Range: -40° C to+105° C

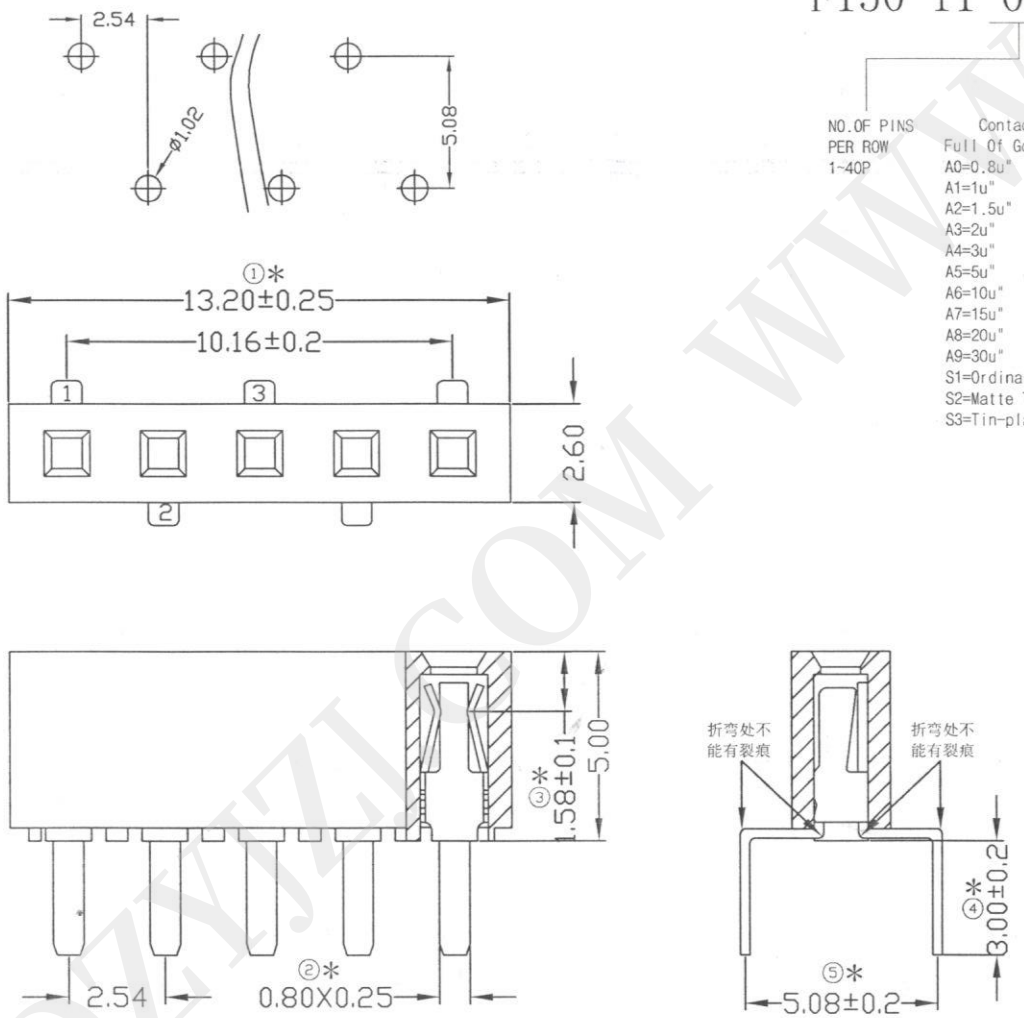

Ordering Information

F150-11 05 A1 C WU C 2

NO.OF PINS PER ROW	Contact Plating: Full Of Gold	Contact Plating: Semi-gold	INSULATOR MATERIAL:	PACKING	TYPE1:1 TYPE2:2
1~40P	A0=0.8u"	B0=0.8U"	B:PA6T	A:PE Bag	
	A1=1u"	B1=1U"	C:PA9T	B:Tape & Reel	
	A2=1.5u"	B2=1.5U"	D:LCP	C:Tube	
	A3=2u"	B3=2U"		D:Tube+CAP	
	A4=3u"	B4=3U"		E:Tray	
	A5=5u"	B5=5U"			
	A6=10u"	B6=10U"			
	A7=15u"	B7=15U"			
	A8=20u"	B8=20U"			
	A9=30u"	B9=30U"			

S1=Ordinary Tin Plated
S2=Matte Tin Plated
S3=Tin-plated High-temperature

工程部
2019.11.06
受控文件

东莞市宇熙精密连接器有限公司
發行章
工程部

受控文件
宇熙精密

客编:V1171

注意事项
1.PA9T新料 磷铜 DIP:3.0 镀金1U 镍底50U,
2.注意端子折弯处不能有裂痕,
3.带*为品管检验尺寸。

					OPERATION		SCALE		Fit	Yxcon www.yxcon.com	东莞市宇熙精密连接器有限公司 Dongguan Yuxi Electronic Co.,Ltd.
					X.X	±0.25	UNIT		MM		
					X.XX	±0.20	SIZE	A4	DESIGN	杨哲	PART NO. F150-1105A1CWUC2
					X.XXX	±0.10	SHEET	1/1	CHECK	莫江江	TITLE: FH2.54*5.0 1*5P 蜈蚣脚/脚距7.62 PA9T新料 磷铜 DIP:3.0 镀金1U 镍底50U 脚粗0.8mm 管装 V1171
A0	2019/11/06	新版发行	杨哲	方总	Angle	±3°					
REV	DATE	MODIFICATION DESCRIPTION	CHANGE	APPROVE	DIM	TOL	PROJ.		APPROVE	方东东	

WWW.DZYYZL.COM