由 Autodesk 教育版产品制作

Specifications

备注(Remark)

1. 材料(MATERIAL)

胶芯：PA9T+30%G.F UL94V-0，颜色:黑色.

Housing:PA9T+30%G.F UL94V-0,Color:Black

端子：磷铜，镍底足30u"MIN,表面镀金足0.8u"

Contact:Phosphor,0.8u"MIN GOLD PLATING OVER ALL
30u"MIN NICKEL UNDERPLATING OVER ALL

2. 特性（characteristics):

额定电流：3 AMP

Raring Current:3 AMP.

接触阻抗：20 mΩ MAX.

Contact Resistance:20 mΩ MAX.

绝缘阻抗：1000 MΩ MIN.

Insulating Resistance:1000 MΩ MIN.

耐电压：AC 500V/分钟.

Withstanding Voltage:AC 500V/Minute.

温度范围：-40° C to+105° C

Temperture Range: -40° C to+105° C

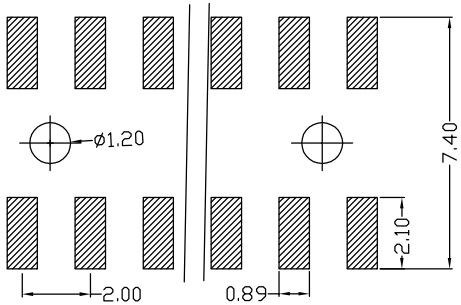

Recommended P.C.B LAYOUT

General Tolerance±0.05

Ordering Information

F243-12 08 A0 C MU B 2

NO.OF PINS PER ROW	Contact Plating Full Of Gold	Contact Plating Semi-gold	INSULATOR MATERIAL:	PACKING
2~40P	A0=0.8u"	B0=0.8U'	B: PA6T	A: PE Bag
	A1=1u"	B1=1U'	C: PA9T	B: Tape & Reel
	A2=1.5u"	B2=1.5U'	D: LCP	C: Tube
	A3=2u"	B3=2U'		D: Tube+CAP
	A4=3u"	B4=3U'		E: Tray
	A5=5u"	B5=5U'		
	A6=10u"	B6=10U'		
	A7=15u"	B7=15U'		
	A8=20u"	B8=20U'		
	A9=30u"	B9=30U'		
	S1=Ordinary Tin Plated			
	S2=Matte Tin Plated			
	S3=Tin-plated High-temperature			

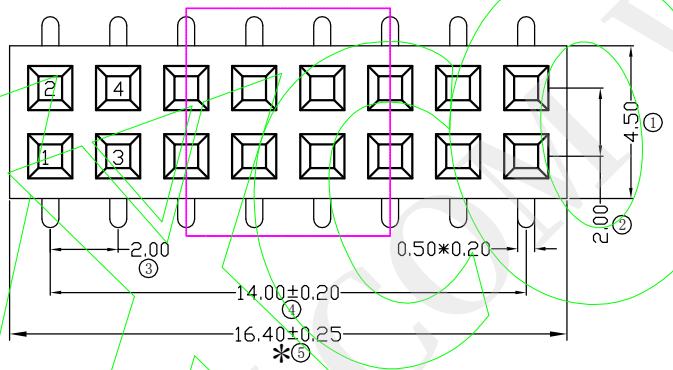

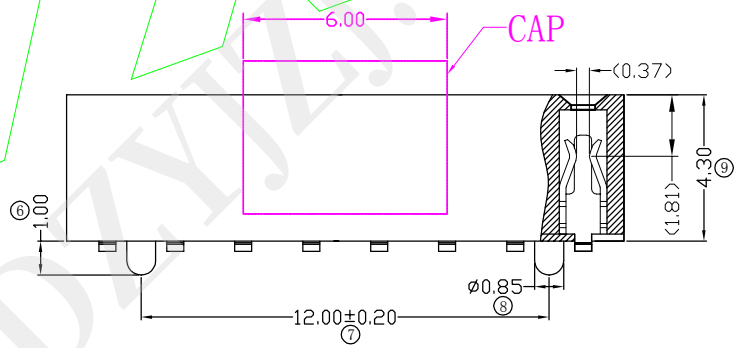

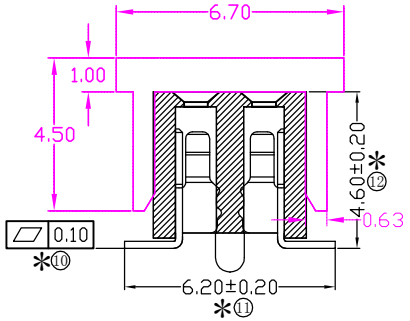

RoHS COMPLIANT

客编：

注意事项

1. 带序号为必检尺寸
2. 带*为品质重点检验尺寸
3. 保持力0.4kg Min（公司标准）

REV	DATE	SYMBOL	MODIFICATION DESCRIPTION
A0	2023.06.20	/	新版发行

OPERATION	
X.X	±0.25
X.XX	±0.20
X.XXX	±0.10
Angle	±3°
DIM	TOL

SCALE		Fit	
UNIT		MM	
SIZE	A4	DESIGN	伍思远2023.07.27
SHEET	1/1	CHECK	
PROJ.		APPROVE	

Yxcon 东莞市宇熙精密连接器有限公司
www.yxcon.com Dongguan Yuxi Electronic Co.,Ltd.

PART NO.	F243-1208A0CMUB2
TITLE:	FH2.0*4.3 2*8P SMT=6.2 W=4.5 U型磷铜 带柱Φ0.85*1.0 PA9T料 镀金足0.8U"镍足30U" CAP+800/卷 V1195
Customer No.	

www.dzyjx.com