	Models.	Code No.	" L "	" I "	Stem color	O/Force
	JT-1230X	130010000044	4.3	3.5	DARK GRAY	130 ± 30 gf
	JT-1230A	130010000047	5.0	3.5	BLACK	160 ± 50 gf
	JT-1230B	130010000053	9.5	3.1	BLACK	160 ± 50 gf
2	JT-1230-01	130010000081	4.5	3.5	LIGHT GRAY	160 ± 50 gf
3	JT-1230-02	130010000097	6.0	3.3	GREEN	160 ± 50 gf
3	JT-1230-03	130010000098	6.5	3.3	LIGHT GRAY	160 ± 50 gf
3	JT-1230	130010000048	4.3	3.5	BLACK	160 ± 50 gf
3	JT-1230F	130010000049	7.0	3.34	BLUE	160 ± 50 gf

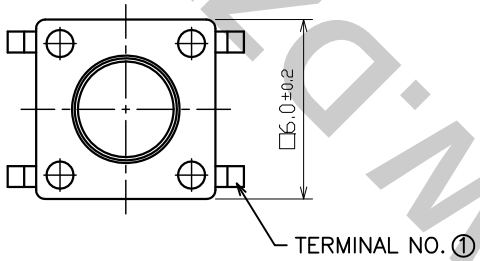

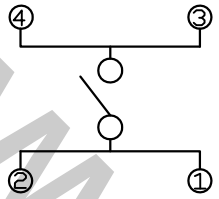

CIRCUIT DIAGRAM

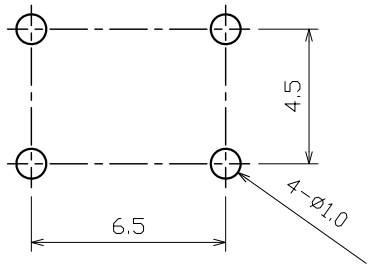

P.C.B MOUNTING HOLE DIMENSION

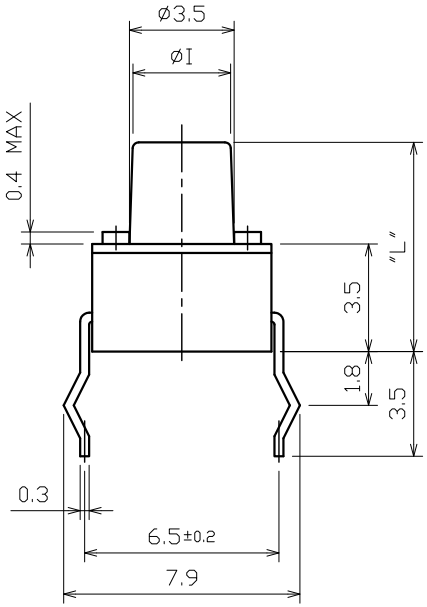

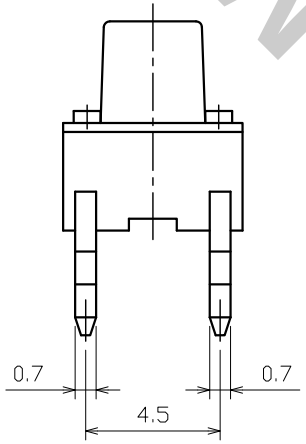

NOTE.
1.Rating :Dc 12V, 50mA
2.TRAVEL : 0.25 ±0.1mm
3.CONTACT RESISTANCE : 100mΩ
4.GENERAL TOLERANCE : ±0.3
5.MANUFACTURING SPECIFICATION WOULD BE ACCORDANCE WITH JT0138

3	모델 파생	08.12.26	W.K.JEONG
2	모델 파생	08.04.04	W.K.JEONG
1	JT-1230 Series 도면 사양 정리(QNA 요청)	06.11.03	W.K.JEONG
RevNo.	Revsion note	Date	Signature

Itemref	Quantity	Title/Name, designation, material, dimension etc	Article No./Reference

Designed by	Checked by	Approved by	File name	Date	Scale
w.k.Jeong		t.h.Oh		2006.11.03	

Model name	TACTILE SWITCH	Part name	ASSEMBLY
Model no.	JT-1230 SERIES	Code no. CODE No.	Edition / Sheet 1

NAMAE Electronics Inc.

WWW.DZKJ.COM

1. Temperature range

   1.1 Storage Temperature range -25℃ to 70℃

   1.2 Temperature range for use -15℃ to 60℃

2. Test circumstance condition

   2.1 Ambient temperature 16℃

   2.2 Relative humidity 63% to 74%

   2.3 Air pressure 102KPA

3. Appearance, Structure and Dimension

   3.1 Appearance : Functionally free from rust, crack and bad plating.

   3.2 Structure and Dimension : Reference per attached outline drawing.

4. Rating : DC 12V 50mA

5. Mechanical performance

Items		Test conditions	Requirements
5.1	Press force	Placing the switch such that the direction of switch operation is vertical, and then gradually increasing the load applied to the center of the knob the maximum load for the knob to come to a stop shall be measured	As per individual manufactured Drawing
5.2	Travel	Placing the switch such that the direction of switch Operation is vertical and then applying a static load twice the operating force to the center of the knob, the travel distance for the knob to come to a stop shall be measured.	0.25±0.1mm
5.3	Return force	The sample switch is installed such that the direction of switch operation is vertical, and upon depression of knob in its center the whole travel distance, the force of the knob to return to its free position shall be measured.	130gf : 50 ±20gf 160gf ; greater than 40gf

5.4	Actuator strength	To the press direction 10N until the stop for 5 sec	Item 5.1, 6.1 to 6.3 shall be satisfied. Without damage of actuator. Function and action is in gear.
5.5	Connection Port Strength	To any the connection place pull 5N, 10±1sec	Without damage of connection. Port function and action is in gear
5.6	Solder-Ability	An hour later, the steam ageing. The soldering area of the terminal shall be immersed into molten solder at a temperature of 235±5℃ for 2±0.5sec	More than 90% of the dipping part shall be covered by solder
5.7	Soldering heat resistance	The soldering area of the terminal shall be immersed into molten solder at a temperature of 260±5℃ for 5 sec	1) There shall not be deforming in appearance 2) The requirements specified in Item 5.1, 6.1 to 6.3 shall be satisfie.

6. Electrical performance

6.1	Contact Resistance	Rating : DC 5V Current : 100±2mA		100mΩ(Max)
6.2	Insulation Resistance	A voltage of 100V. DC shall be applied for 1 min after which measurement shall be made	Between terminals	100MΩ or more
			Between individual terminal and frame	
6.3	Withstand Voltage	250V. AC/50Hz for 1min,	Between terminals	No arcing or break down shall occur. Trip current < 0.5mA
			Between individual terminal and frame	
6.4	Librate	Librate frequency: 10-500Hz Swing : Extent cost displacement should be 0.35mm, The accelerated extent cost should be 50m/s^2. The scan time: 11 minutes once a time. Do it for five times.		Item 6.1 shall be satisfied, the façade of the switch have no abnormity, motion and function is good

WWW.DZYJZJ.COM WWW.DZYJZJ

PDF created with pdfFactory Pro trial version www.pdffactory.com

7. Weatheralility

	PROPERTY	TEST CONDITION		PERFORMANCE
7.1	Invaria-Blenes Damp Heat	Switch for test shall be Stored at a temperature 40±2℃, and a relative humidity of 90-95% for 96 hours. Then the switch shall be maintained at standard atmospheric conditions for an hour after which measurement shall be made within 96hour.	Contact resistance. Refer to Item 6.1	100mΩ or less
			Insulation resistance. Refer to Item 6.2	100MΩ(Max)
			Withstand voltage. Refer to Item 6.3	No arcing or break down shall occur.
			Operating force and Appearance	Item 5.1 shall be satisfied, there shall be no deformation or cracks in molded part or excessive rust and discoloration
7.2	Dry heat proof	Switch for test shall be stored at a temperature of 70±2℃for 72 hours, and at standard atmospheric Conditions for 1 hour then to be measured within 1 hour.		The Item 3.1, 5.1, 6.1 to 6.3 shall be satisfied
7.3	Cold proof	Switch for test shall be stored at a temperature of -25±3℃for 16 hours, and at standard atmospheric Conditions for 1hour then to be measured within 1 hour.		

8. Durability

8.1	Life Test	100,000 cycles of a knob operation shall be performed continuously at a rate of 2~3 cycles/sec	Press force. Refer to Item 5.1	±30% of initial force
			Contact resistance. Refer to Item 6.1	200mΩ (Max)
			Insulation resistance. Refer to Item 6.2	100MΩ or more
			Withstand voltage. Refer to Item 6.3	No arcing or Break down shall occur

WWW.DZYJZJ.COM WWW.DZYJZJ

PDF created with pdfFactory Pro trial version www.pdffactory.com

9. Soldering conditions

9.1	Hand soldering	Please practice according to below condition: (1) Soldering temperature: 260℃ Max (2) Continuous soldering time: 5s Max (3) Capacity of soldering iron: 20W Max
9.2	Automatic flow soldering	For the product of SMD, in case an automatic flow soldering apparatus is used for soldering adhere to the following conditions: 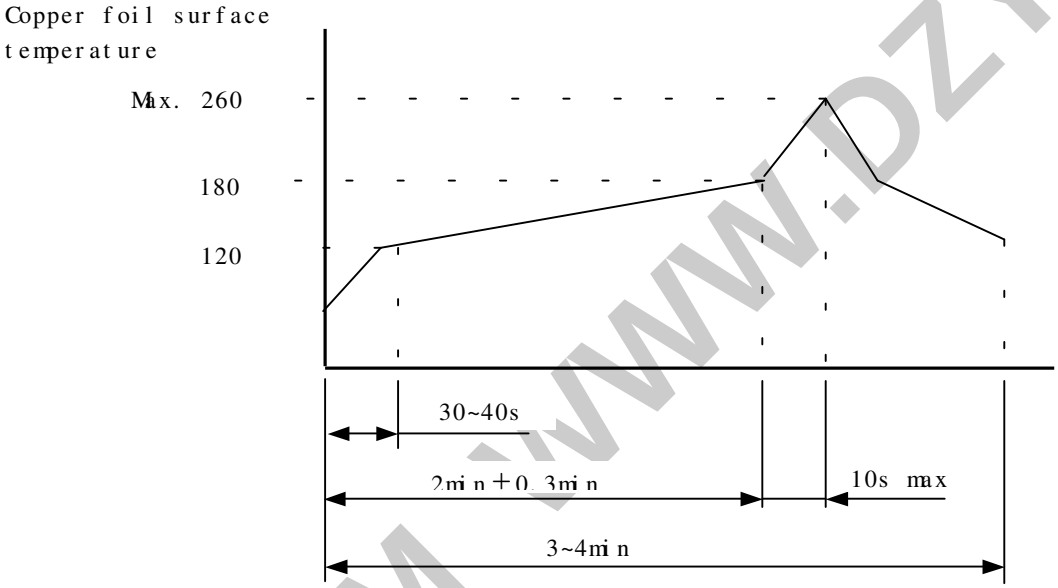 Time inside soldering equipment
9.3	Automatic flow soldering	(1) Preheat: Temperature on the copper foil surface should reach preheat maximum temperature of 180℃ within 2min±0.3mm after the PWB entered into the soldering equipment. (2) Soldering: Temperature on the copper foil surface should reach the peak temperature of 260℃ within 10 seconds max. after the PWB entered into soldering heat zone (3) Caution: The condition mentioned above is a temperature on the PWB surface on which parts are mounted. There are cases where PWB temperature greatly differs from switch's surface temperature depending on PWB material, size, thickness, etc. Care, therefore, should be used not to allow switch's surface temperature to exceed 260℃

WWW.DZYJZJ.COM WWW.DZYJZJ

PDF created with pdfFactory Pro trial version www.pdffactory.com