ROHS

REV.	ECN NO.	DESCRIPTION	DRAW	DATE

技术要求(Technical Index):

1. 材质与表面处理(Material And Finish):
   基座（Housing）and 盖子（Cover）：LCP UL94V-0 Nature Or Black;
   端子（Terminal）:Phosphor Copper Au/Sn Plated;
   焊片（Solder）：Copper Alloy Au/Sn Plated;
2. 工作温度(Temperature range)：-25° C～+85° C.
3. 额定电压(Rated voltage)：50V，AC/DC.
4. 额定电流：0.4A,AC/DC.
5. 接触电阻(Contact resistance)：≤20mΩ.
6. 绝缘电阻(Insulation resistance):≥500MΩ.
7. 耐电压(Withstanding Voltage):200V AC/minute.

12PIN

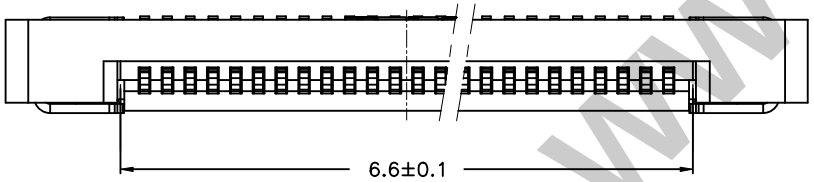

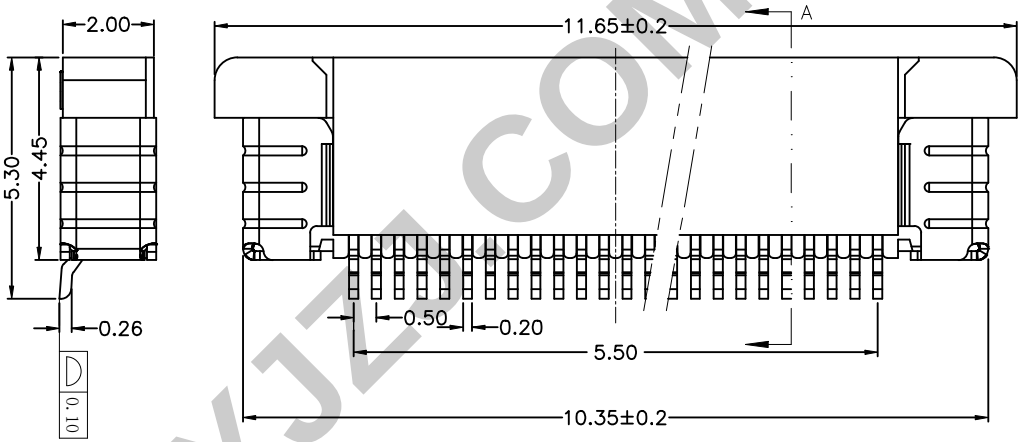

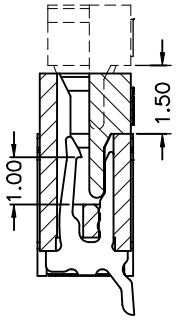

SECTION A—A

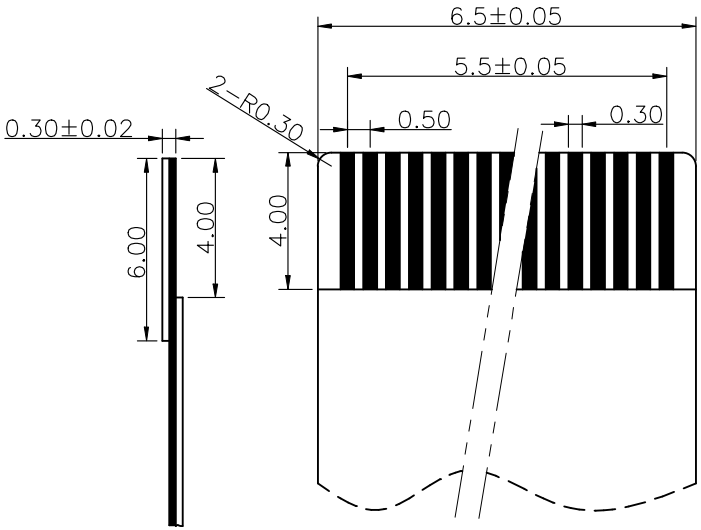

适用扁平电缆

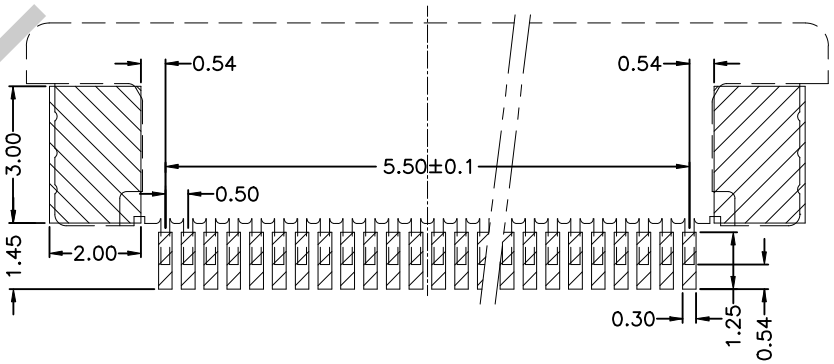

PCB Layout

COSTOMER DRAWING					
DRAWING			LAILAN 深圳市莱联电子有限公司 SHENZHEN LAILIAN ELECTRONICS CO.,LTD		
CHECKED					
APPROVED					
TOLERANCES ARE			TITLE	FPC连接器0.5间距12PIN抽屉式上接（卧贴）	REV. A
30-150	±0.35	ANGLE	PART NO.	LAIL-FPC-BS01-12P0.5-W	UNITS mm
10-30	±0.2				
5-10	±0.15	±3°	DWG. NO.		Projection
0-5	±0.1				

WWW.DZYJZ1.COM WWW.DZ