| ● 参数范围 Parameter Ratings | |
|---|---|
| 额定电流 Current rating | 3A AC，DC |
| 额定电压 Voltage rating | 250V AC，DC |
| 温度范围 Temperature range | -25℃～85℃ |
| 适用基板厚度 Applicable PC board thickness | 1.6mm |
| 接触电阻 Contact resistance | ≤0.02Ω |
| 绝缘电阻 Insulation resistance | ≥1000MΩ min |
| 耐压 Withstanding voltage | 1000V AC/min |
| 适用导线规格 Applicable wire | AWG#28 to #22 |

## ●产品性能Performance

| 序号<br>NO. | 项目<br>item | 试验条件及方法<br>Test condition and test method | 要求<br>Request |
|---|---|---|---|
| 1 | 外观<br>Appearance | 目测 Checking by eye<br>视力：1.0 以上<br>Eyesight: > 1.0<br>照明： 200lx～300lx<br>Lamp: 200lx～300lx<br>目测距离：0.3m～0.5 m<br>m Space: 0.3 m～0.5 m | 1.塑料件表面应无明显疤痕、凹陷、开裂及影响使用的变形。<br>Plastic part: smooth and flat surface without discolor, broken, crack, and distortion, etc.<br>2.金属件表面无锈蚀、氧化 、无明显的机械损伤及电镀层脱落等缺陷。<br>Metal part: bright and even surface without rust, oxide, fog and obvious physical damage, etc. |
| 2 | 针的固定力<br>Retention Force for Pin | 固定连接器/或测力计，在连接器轴线方向施加推力进行测试，速度不大于25mm/min。<br>Apply thrust force on the pin in the wafer at a rate of 25 mm/min . | 15N Min |
| 3 | 端子固定力<br>Retention Force for Terminal | 固定连接器/或测力计，在连接器轴线方向施加拉力进行测试，速度不大于25mm/min。<br>Fix the connector and / or dynamometer, apply tensile force in the direction of connector axis for test, and the speed shall not be greater than 25mm / min. | 15N Min |
| 4 | 抗张强度<br>CrimpingPull OutForce | 将压接后的端子连接器以25mm分钟速度沿线体方向拉伸，测量电线破断时的拉力值。<br>Fixing the crimped terminal,applying axial pull out force to the wire at the speed rate of 25mm/min. | AWG 28#: 10N Min.<br>AWG 26#: 15N Min.<br>AWG 24#: 20N Min.<br>AWG 22#: 30N Min. |

WWW.DZYIZ.COM

## ●产品性能Performance

| 序号<br>NO. | 项目<br>item | 试验条件及方法<br>Test condition and test method | 要求<br>Request | |
|---|---|---|---|---|
| 5 | 插入力和拔出力<br>Mating andUnmatingForce | 把阳连接器固定在推拉式测力计上，将压接后的连接器端子装在孔座内，沿轴向进行插拔，插入时的力为插入力，拔出时的力为拔出力。<br>Applying axial insertion and withdrawal force to the mating connectors at the speed rate of 25mm/min. | 插入力<br>Insertion Force | 拔出力<br>Withdrawal Force |
| | | | ＜10N | ＞2N |
| 6 | 振动<br>Vibration | 插合连接器，串联在一直流电源上,电流100mA;并模拟正常工作状态；<br>振频:10～55～10Hz;每个循环时间为1分钟，振幅1.52mm沿XYZ三轴正反方向各循环2h。<br>Mated connectors subjected to following vibration conditions, for a period of 2 hours in each of 3 mutually perpendicular axes, 100 mA current shall be applied.<br>Frequency: (10~55～10) HZ/minute<br>Amplitude: 1.52mm | 接触电阻：≤0.02Ω；<br>电流不连续性（瞬断电流）不超过1微秒。<br>Appearance:No Damage.<br>Contact Resistance:≤0.02Ω.<br>Current discontinuity:<br>1 microsecond max | |
| 7 | 机械寿命<br>Durability | 以每分钟插拔10次的速率，插拔50次。<br>mating up to 50 times repeatedly by the rate of 10 cycles per minute. | 外观：无损伤<br>Appearance: No damage.<br>接触电阻：0.02ΩMax<br>Contact Resistance: 0.02ΩMax. | |
| 8 | 接触电阻<br>Termination Resistance | 插配阴阳连接器后,用小功率电路进行测试<br>Mate connectors with dry circuit to test contact resistance | 0.02Ω Max | |
| 9 | 绝缘电阻<br>Insulation Resistance | 相邻接触件之间或地线之间,用 500V DC 电压进行测试. Apply a voltage of 500 VDC between adjacent contacts and between contacts to ground. | 1000 MΩ Min | |
| 10 | 耐电压<br>Dielectric Strength | 相邻接触件之间或地线之间施加1000V AC (有效值),漏电流 1mA 的电压作用,时间 1min.<br>Apply a voltage of AC 1000 V for 1 minute between adjacent contacts and between contacts to ground. | 外观：无击穿和飞弧现象<br>Appearance: No Breakdown | |
| 11 | 可焊性<br>Solderability | 把试验样品需要焊接的部位浸入焊锡炉中，温度：240±5℃;时间：2±0.5s.<br>Solder Temperature:240±5℃<br>Soldering Time:2±0.5 second | 上锡率≥90%：<br>Solder coverage: ≥90% | |

www.dzyjx.com

| ●产品性能Performance | | | |
|---|---|---|---|
| 序号<br>NO. | 项目<br>item | 试验条件及方法<br>Test condition and test method | 要求<br>Request |
| 12 | 耐焊接热<br>Resistanceto SolderingHeat | 把试验样品需要焊接的部位浸入焊锡炉中,锡炉温度:260℃;时间:2±0.5s;在正常条件下恢复 1~2h。<br>Dip solder tails into the molten solder held at 260℃ for 2±0.5 sec., Recovery time 1~2 hours | 连接器无变形、损伤、机械性能无影响。<br>Appearance:No Damage. |
| 13 | 耐高温<br>High temperature | 连接器在插合状态下进行测试，温度在85℃状态下暴露96h。<br>Mating the connectors and testing: temperature:85℃;Expose time:96h | 无影响连接器正常使用的损伤。<br>Appearance:No Damage. |
| 14 | 耐低温<br>Low temperature | 连接器在插合状态下进行测试，温度在-25℃状态下暴露96h。<br>Mating the connectors and testing: temperature:-25℃;<br>Expose time:96h | |
| 15 | 恒定湿热<br>Humidity | 连接器在插合状态下进行测试：<br>温度：40℃；<br>相对湿度：90%～95%；<br>暴露96h后进行测定。<br>Mating the connectors and testing: temperature:40℃;<br>Relative humidity:90%-95%;<br>Expose time:96h | 外观无异常；<br>耐电压：1000V AC/MIN;<br>接触电阻：≤0.02Ω；<br>绝缘电阻：≥1000MΩ。<br>Appearance:No Damage;<br>Withstand voltage:1000V AC/min;<br>Contact Resistance:≤0.02Ω;<br>Insulation Resistance:≥1000MΩ. |
| 16 | 温度循环<br>Temper ature Cycling | 连接器在插合状态下进行测试：<br>高温：+85℃±2℃；低温：-25℃±2℃；<br>暴露时间：30min;<br>转换持续时间不多于30min;<br>循环次数：5次；<br>循环结束后恢复1h。<br>Mating the connectors and testing:<br>High temperature:+85℃±2℃;<br>Low temperature:-25℃±2℃;<br>Expose time:30min;<br>Cycling lasting time:30min max<br>Cycles:5 times in 1 hours | 无影响连接器正常使用的损伤；<br>接触电阻：≤0.02Ω<br>Appearance:No Damage;<br>Contact Resistance: 0.02Ω Max |
| 17 | 盐雾<br>Salt Spray | 把试验样品从试验箱顶悬挂下来，采用浓度为(5±1)%(质量百分比)的氯化钠溶液，在(35±2)℃温度下连续雾化24h,试验后用流动的蒸馏水轻轻洗去表面沉积物。在常温常湿条件下恢复（1～2）h<br>24 hours spray, at temp (35±2)°C, NaCl mist concentration (5±1)% 。After test，wash parts and put it into room ambient for 1~2 hours | 外观:无损伤(五金件应无露出底金属的严重锈蚀;使用预镀好的型材,其落料面允许有不影响其性能的轻微腐蚀。)<br>Appearance：No Damage (No erosion with material exposed. And with plating material,<br>slight erosion on the cutting surface is acceptable) |

WWW.DZYJZ.COM

# 5264连接器承认图面

| 标记 | 处数 | 更改前内容 | 更改后内容 | 签名 | 年.月.日 |
|---|---|---|---|---|---|
| | | | | | |

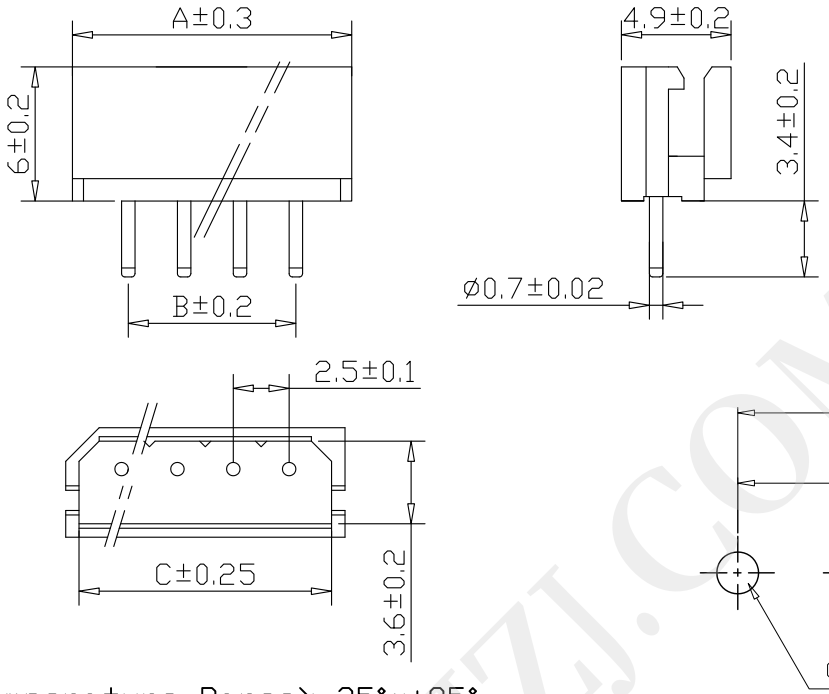


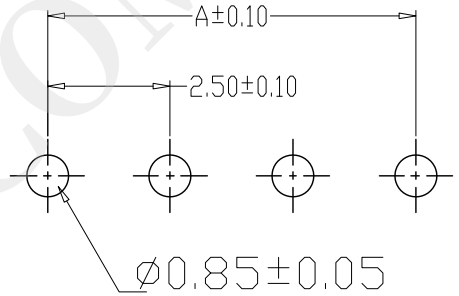


| 孔位 | A | B | C |
|---|---|---|---|
| 2 | 7.5 | 2.5 | 6.2 |
| 3 | 10 | 5.0 | 8.7 |
| 4 | 12.5 | 7.5 | 11.2 |
| 5 | 15.0 | 10.0 | 13.7 |
| 6 | 17.5 | 12.5 | 16.2 |
| 7 | 20.0 | 15.0 | 18.7 |
| 8 | 22.5 | 17.5 | 21.2 |
| 9 | 25.0 | 20.0 | 23.7 |
| 10 | 27.5 | 22.5 | 26.2 |
| 11 | 30.0 | 25.0 | 28.7 |
| 12 | 32.5 | 27.5 | 31.2 |
| 13 | 35.0 | 30.0 | 33.7 |
| 14 | 37.5 | 32.5 | 36.2 |
| 15 | 40.0 | 35.0 | 38.7 |

PCB LAYOUT

使用温度范围 (Ambient temperature Range):-25°~+85°

适用线规 (Applicable Wires): AWG28#~22#

适用基板厚度 (Applicable PCboard thickness):1.6mm

额定电压 (Voltage rating):250V AC,DC

额定电流 (Current rating):3A

接触电阻 (Contact Resistance):<0.02Ω

绝缘电阻 (Insulation Resistance):>1000MΩ

耐压 (Withstand Voltange):1000VAC/min

材料 (Material)

1.基座 PA66 94V-0

2.插针: 黄铜

| 序号 | 图号 | 名称 | 材料 | 数量 | 附注 |
|---|---|---|---|---|---|
| 2 | | Wafer 针 | Brass Tin 黄铜镀锡 | N | |
| 1 | | Housing 基座 | PA66 94V-0 | 1 | |

未注公差

X.°±3° X.X°±5°

LXW 连兴旺电子(深圳)有限公司
LXWCONN ELECTRONICS(SHENZHEN)CO.,LTD

| >0-3 | >3-18 | >18-50 | >50-120 | | | Design Units | SIZE |
|---|---|---|---|---|---|---|---|
| ±0.15 | ±0.2 | ±0.3 | ±0.5 | Only | —— | METRIC | A4 |

| 制作 | 审核 | 批准 | 材料 | 图号 | | Part No. | LXW-5264-XA |
|---|---|---|---|---|---|---|---|
| | | | 见图解 | 品名 | | | |

WWW.DZYJZJ.COM

# 5264连接器承认图面

| 标记 | 处数 | 更改前内容 | 更改后内容 | 签名 | 年.月.日 |
|---|---|---|---|---|---|
| | | | | | |

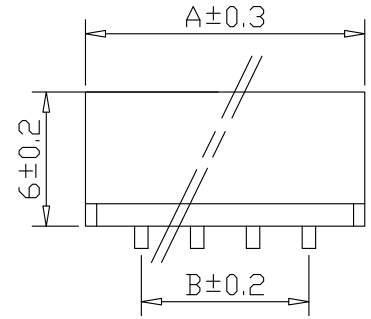


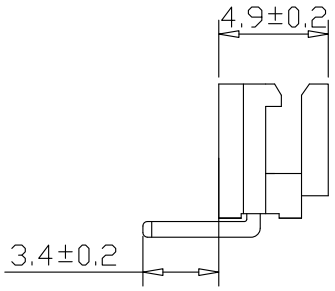


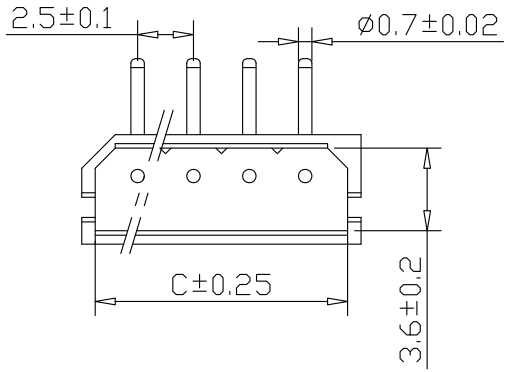


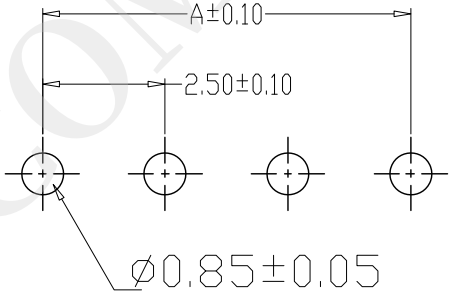


PCB LAYOUT

| 孔位 | A | B | C |
|---|---|---|---|
| 2 | 7.5 | 2.5 | 6.2 |
| 3 | 10 | 5.0 | 8.7 |
| 4 | 12.5 | 7.5 | 11.2 |
| 5 | 15.0 | 10.0 | 13.7 |
| 6 | 17.5 | 12.5 | 16.2 |
| 7 | 20.0 | 15.0 | 18.7 |
| 8 | 22.5 | 17.5 | 21.2 |
| 9 | 25.0 | 20.0 | 23.7 |
| 10 | 27.5 | 22.5 | 26.2 |
| 11 | 30.0 | 25.0 | 28.7 |
| 12 | 32.5 | 27.5 | 31.2 |
| 13 | 35.0 | 30.0 | 33.7 |
| 14 | 37.5 | 32.5 | 36.2 |
| 15 | 40.0 | 35.0 | 38.7 |

使用温度范围 (Ambient temperature Range):-25°~+85°

适用线规 (Applicable Wires): AWG28#~22#

适用基板厚度 (Applicable PCboard thickness):1.6mm

额定电压 (Voltage rating):250V AC,DC

额定电流 (Current rating):3A

接触电阻 (Contact Resistance):<0.02Ω

绝缘电阻 (Insulation Resistance):>1000MΩ

耐压 (Withstand Voltange):1000VAC/min

材料 (Material)

1.基座 PA66 94V-0

2.插针: 黄铜

| 序号 | 图号 | 名称 | 材料 | 数量 | 附注 |
|---|---|---|---|---|---|
| 2 | | Wafer 针 | Brass Tin 黄铜镀锡 | N | |
| 1 | | Housing 基座 | PA66 94V-0 | 1 | |

未注公差

X.°±3° X.X°±5°

>0-3 >3-18 >18-50 >50-120

±0.15 ±0.2 ±0.3 ±0.5

Only ——

Design Units METRIC

SIZE A4

LXW 连兴旺电子(深圳)有限公司

LXWCONN ELECTRONICS(SHENZHEN)CO.,LTD

| 制作 | 审核 | 批准 | 材料 | 图号 | Part No. | LXW-5264-XAW |
|---|---|---|---|---|---|---|
| | | | 见图解 | 品名 | | |

WWW.DZYJZJ.COM

# 5264产品图面

| 标记 | 处数 | 更改前内容 | 更改后内容 | 签名 | 年.月.日 |
|---|---|---|---|---|---|
| | | | | | |

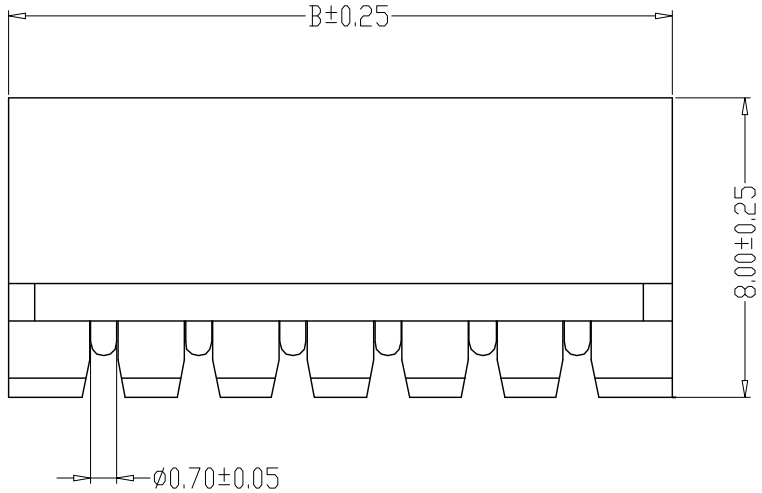


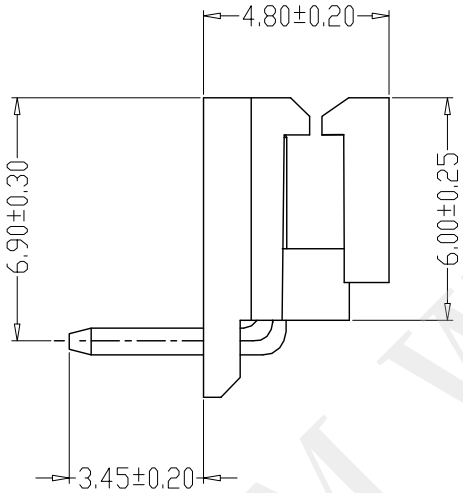


使用温度范围 (Ambient temperature Range):-25°~+85°
适用线规 (Applicable /Wires):AWG 28#~22#
适用基板厚度 Applicable PCboard thickness):1.6mm
额定电压 (Voltage rating):250V AC,DC
额定电流 (Current rating):3A
接触电阻 Contact Resistance):<0.02Ω
绝缘电阻 (Insulation Resistance):>1000MΩ
耐压 (Withstand Voltange):1000V/min

| 编 号 | 尺寸 (mm) | |
|---|---|---|
| | A | B |
| A2506-02AWD | 2.50 | 7.50 |
| A2506-03AWD | 5.00 | 10.00 |
| A2506-04AWD | 7.50 | 12.50 |
| A2506-05AWD | 10.00 | 15.00 |
| A2506-06AWD | 12.50 | 17.50 |
| A2506-07AWD | 15.00 | 20.00 |
| A2506-08AWD | 17.50 | 22.50 |
| A2506-09AWD | 20.00 | 25.00 |
| A2506-10AWD | 22.50 | 27.50 |
| A2506-11AWD | 25.00 | 30.00 |
| A2506-12AWD | 27.50 | 32.50 |

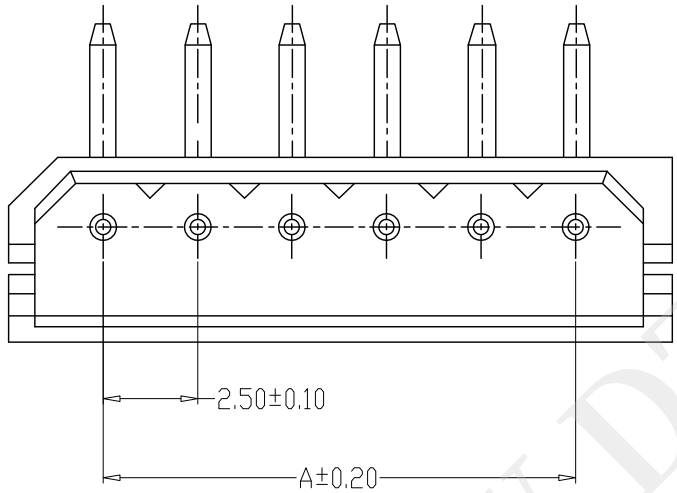


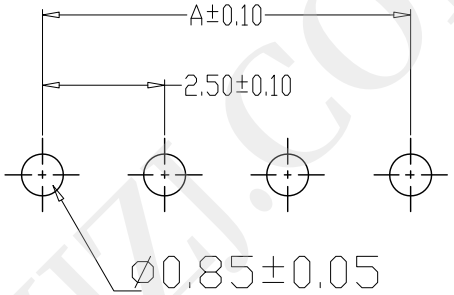


PCB LAYOUT

| 序号 | 图号 | 名称 | 材料 | 数量 | 附注 |
|---|---|---|---|---|---|
| 2 | | 端子 | 黄铜 | N | |
| 1 | | 胶芯 | PA66增强尼龙 | 1 | |

未注公差
X.°±3° X.X°±5°

LXW 连兴旺电子(深圳)有限公司
LXWCONN ELECTRONICS(SHENZHEN)CO.,LTD

| >0-3 | >3-18 | >18-50 | >50-120 | | | Design Units | SIZE |
|---|---|---|---|---|---|---|---|
| ±0.12 | ±0.15 | ±0.3 | ±0.5 | MM Only | —— | METRIC | A4 |

一般公差(TOLERANCE)
X ±.50 .XX ±.10
.X ±.20 .XXX ±.05
ANGLES ±1°

| 制作 | 审核 | 批准 | 材料 | 图号 | | Part No. | LXW-5264-XAWD |
|---|---|---|---|---|---|---|---|
| | | | 见图解 | 品名 | A2506-XXAWD | | |

WWW.DZYIA.COM