CONNECTORS

www.Sofng.com

Operation:SMT/3.5&贴片式音頻插座

Halogen Free | LEAD FREE | RoHS Compliant

LTEM NO.:PJ-320B

(L14.0×W6.0×H5.0mm 3.5-PHONE-JACK)

Technical parameter

PROJECT \ LEVEL		A[better product]	B[average product]
Electrical Properties	Contact Rating	25mA, 24V DC	
	Initial Contact Resistance	30mΩ max.	50mΩ max.
	Insulation Resistance	100MΩ min.500V DC	Skey/PD：100MΩ min.300V DC
	Withstand Voltage	500V AC for 1 minute	350 V AC for 1 minut
Durable Performance	There No Load	6,000 Cycles	5,000 Cycles
	Rated Load	5,000 Cycles	4,000 Cycles
Sterage temp.		-25℃～+75℃(Operating Temp:)	

贴片安装 SMT

侧向導入 LATERAL

精密部品 NICETY

可靠 STABILIZE

適合環保 RoHS

Unit:mm

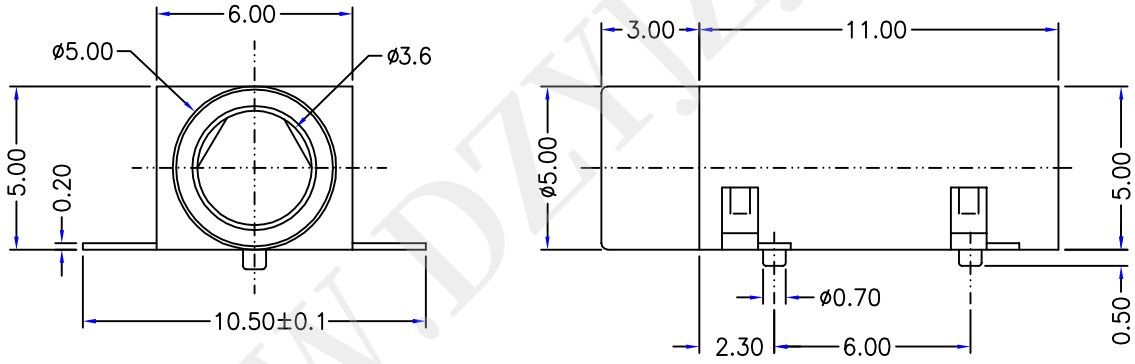

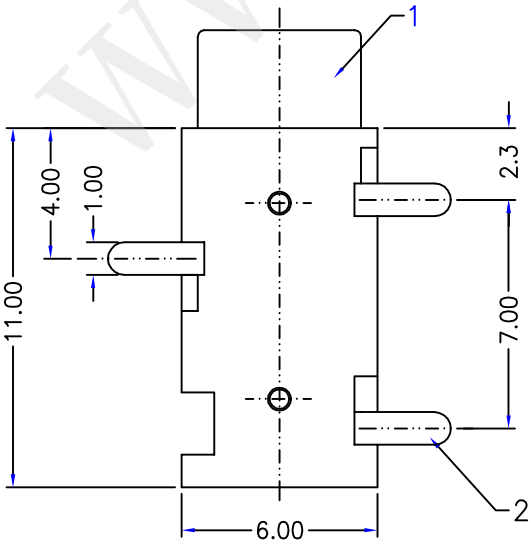

□POLE PLUG

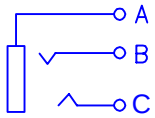

WWW.DZNZJ.COM

CIRCUIT BOARD SIZE
(Vertical view)

Operating Force	Inward	5.0N～10.0N(grams)
	Exiting	5.0N～10.0N(grams)

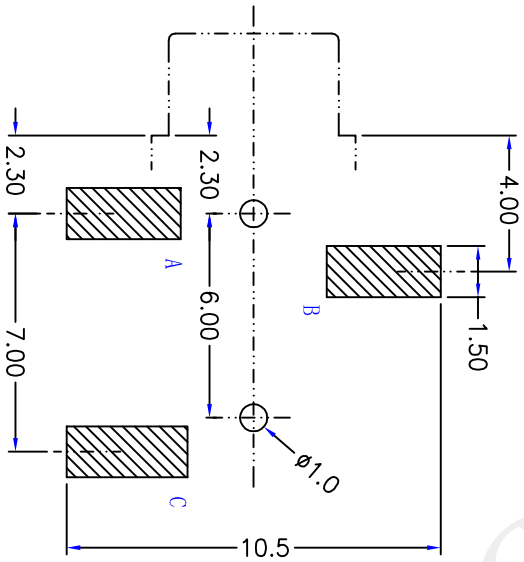

Pin Definition

Material declaration			
No.	NAME	Type	Description
①	基座	1	PA66 (Black)耐热塑胶
②	接觸端子#1	1	C5191R-H (t=0.20mm)磷铜[银基]
③	接觸端子#2	1	C5191R-H (t=0.20mm)磷铜[银基]
④	接觸端子#3	1	C5191R-H (t=0.20mm)磷铜[银基]

本品不屬於危害性廢棄物,須丟棄時可以委託回收商予以回收再生處理。

Products do not belong to •

運送時本產品不要直接與水、酸鹼性化學物質接觸,或放置於含有以上氣體環境中,並且需要注意會有滑落、側翻的危險發生；運輸過程中不能有碰撞或者擠壓,須保證溫度與濕度適中[常溫 25℃,濕度在 50℃以內],不可導致材料變形或氧化。

注記 NOTICE

1. 碩方公司擁有最終解釋權；The company reserves the right of final interpretation;
2. 文件禁止外洩、轉載；Leaked and reproduced prohibited;
3. 未經授權修改無效。Modify is invalid.

WWW.DZYJI.COM