HSF RoHS

FILE NO:E382810

SPECIFICATIONS
Rated Current:1.0AMP
Contact Resistance:20mΩ Max
Withstand Voltage:500V AC/DC
Insulation Resistance:1000MΩ Min
Operation Temperature:−40°c to +105°c

Contact Material:Phosphor Bronze
Contact Plating:Au Over Ni
Insulator Material:Polyester(UL94V−0)
Standard: PA9T
Max.Processing Temp: 230°C for 30−60 seconds
(260°C for 10 seconds)

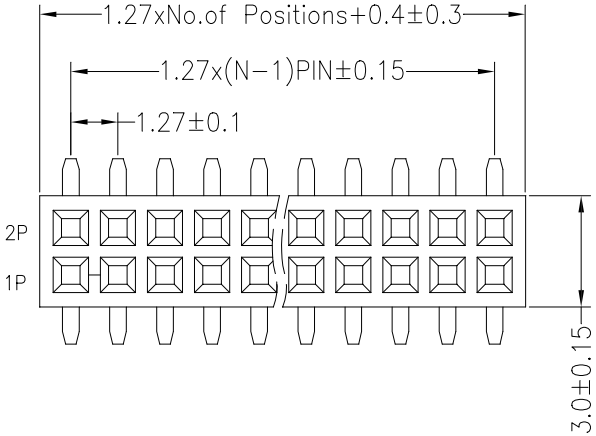

Recommended P.C.B Layout(Top Side)
(PCB BOARD TOLERANCE±0.05)

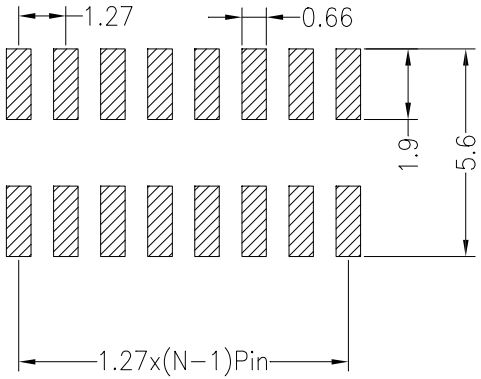

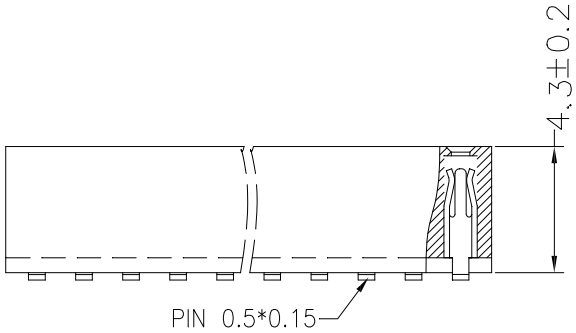

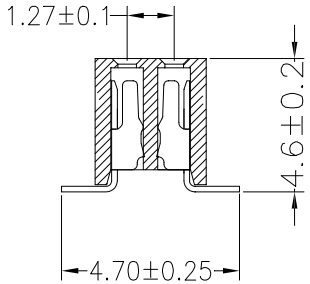

REV	DATE	MODIFICATION DESCRIPTION	CHANGE
A0	2012.04.18	NEW DRAWING	

OPERATION					
X.X	±0.30	DRAW	BEN	12.04.18	SCALE FIT
X.XX	±0.20	CHECK			UNIT mm
X.XXX	±0.10				SIZE A4
Angle	±3°	APPROVE			SHEET 1/1
DIM	TOL				PROJ.

深圳市华灿天禄电子有限公司

PART NO.	PM127-2-N-S-4.3
TITLE:	1.27PF 2xNPin H4.3