ISO9001: 2015

ISO14001: 2015

APPROVAL SPECIFICATIONS

Title. MICRO USB

Product Model. UB1611-HGN

Customer's Part NO.

Customer's Model:

Customer's Approval Requested.

Please return this copy as a certification of your approval.

Checked by: Date:

Approved by: Date:

APPROVE	REVIEW	PREPARE

Shenzhen Gangyuan Microkey Technology Co.,ltd

WWW.DZYIZI.COM

变更履历表：

版本 **Version**	变更记录 **History**	变更人 **Changed by**	变 更 日 期 **Date**
A/00			

WWW.DZYIZJ.COM

1、 概述 GENERAL

1.1 适用范围 APPLICATION

此规格书适用于 USB 接口的相关要求

This specification is applied to the requirements for USB connector

1.2 工作温度范围 Operating Temperature Range

-30℃～85℃(在标准大气压、标准湿度条件下)

-30℃～85℃(Normal humidity, normal air pressure)

1.3 贮藏温度范围 Storage Temperature Range

-30℃～85℃(在标准大气压、标准湿度条件下)

-30℃～85℃(Normal humidity, normal air pressure)

1.4 测试条件 Test Conditions

在没有其它特定的条件下，应该在以下的条件下进行测试和测量：

Unless otherwise specified, tests and measurement shall be made in the following standard conditions:

常温……5℃～35℃

Normal temperature……5℃～35℃

标准湿度……相对湿度 25%～85%

Normal humidity……relative humidity 25%～85%

标准大气压……86Kpa～106Kpa

Normal air pressure……86Kpa～106Kpa

在制造过程中，测试和测量应该在以下的条件下进行：

If any doubt arise from the judgment, tests shall be conducted at the following conditions:

温度……20℃±2℃

Temperature……20℃±2℃

相对湿度……65%±5%

Relative humidity……65%±5%

环境气压……86Kpa～106Kpa

Air pressure……86Kpa～106Kpa

1.5 存储方法

Storage method

1.使用前确保包装完整无破损，无浸湿.

Ensure that the product without package breaking or wetting before use.

2.存储条件 Storage conditions:

储存温度 Storage temperature：-5 ~ 35 C；

储存湿度 Storage humidity：25% ~80%；

未开封状态：6 个月内使用完毕（从发货日开始计算）； 超过 6 个月后再使用的，使用前请先验证：端脚无氧化、无发黑、塑料件无吸湿起泡，确保焊接的适宜性；

Unopened status: Use up the product as soon as possible before six months. (calculated from shipment date).Over 6 months, please make sure below before use it: terminal without oxidation or blackening, plastic parts without moisture absorption or bubble, ensure solderability.

已开封状态：1 个月内使用完毕；

Opened status: use up within 1 month;

储存注意事项：避开高湿高温和有腐蚀性气体的环境及阳光直射；

Storage precautions: Please avoid the following environment: with high humidity, high temperature , corrosive gases and direct sunlight.

3.请勿超重叠放.

Do not stack too many switches.

WWW.DZYJZJ.COM

2、 详细说明

Detailed specification

2.1 外观：应无影响、降低产品性能的缺陷；

Appearance: There should be no defects that affect the serviceability of product.

2.2 结构尺寸和安装尺寸：应符合装配图要求；

Style and dimension: shall conform to the assemble drawings.

2.3 开关工作额定值：DC 20V 5A（最大值）

Ratings: DC 20V 5A（Max）

3．电气性能：

ELECTRICAL SPECIFICATION

项 目 ITEM		试 验 条 件 TEST CONDITIONS	要求 REQUIREMENTS
3.1	接触电阻 Contact Resistance	插入插头，与公母座搭配,然后用电流最大 100mA 电压最大 20mV 测量及记录接触阻抗,且要除去导线本身的阻抗值。 Mated plugs,measure by dry circuit,20mV DC maximum,open circuit 100mA maximum. Except wire conductor resistance.	≤100mΩ
3.2	绝缘电阻 Insulation Resistance	插入插头后，在相邻的端子或接地间,施以直流 500 伏的电压 1 分钟 Mated plugs,apply 500V DC for 1 minute between adjacent terminals or ground.	≥100MΩ
3.3	耐 压 Dielectric voltage proof	在相邻的端子或接地间施加交流 500V 的电压 1 分钟 Mated plugs, apply 500V AC at 60Hz for 1 minute between adjacent terminals or ground.	无击穿、无飞弧 There should be no breakdown and flashover

WWW.DZSZJ.COM

项目 ITEM		试 验 条 件 TEST CONDITIONS	要求 REQUIREMENTS
4．机械性能： MECHANICAL SPECIFICATION			
4.1	插拔力 Insert And Extract Force	测试一组公母对插之连接器所需之插拔力，测试速度 25mm/分钟。 Measure mating force necessary to mate connector. Operating speed:25mm/minute.	插入力：5N~20N 拔出力：8N~20N Insertion force:5N~20N. Withdrawal force: 8N~20N
4.2	端子强度 Terminal strength	测试将端子由本体中拉出之保持力，测试速度 25mm/分钟 Apply axial pull out force on the terminal assembled in the housing. Operation speed:25mm/minute	保持力：最小 12N Retention force：12N Min.

WWW.DZYJZJ.COM

5、环境耐久性：
ENVIRONMENTAL SPECIFICATION

项目 ITEM		试 验 条 件 TEST CONDITIONS	要求 REQUIREMENTS
5.1	低温测试 Resistance to low temperature	样品应按照以下实验条件进行测试，实验后样品应放在常温及标准湿度的环境中 1 小时后做性能测试： Following the test set forth below the sample shall be left in normal temperature and humidity conditions for 1 h before measurements are made: （1） 温度：-30±2℃ Temperature : -30±2℃ （2） 时间：96h Time: 96h	Item3 Item4.1 Item4.2
5.2	高温测试 Heat resistance	样品应按照以下实验条件进行测试，实验后样品应放在常温及标准湿度的环境中 1 小时后做性能测试： Following the test set forth below the sample shall be left in normal temperature and humidity conditions for 1 h before measurements are made: （1） 温度：85±2℃ temperature:85±2℃ （2） 时间：96h time: 96h	Item3 Item4.1 Item4.2
5.3	温度变化测试 Change of temperature	根据下面的测试要求进行 5 次循环的温度周期性测试， 实验后样品应放在常温及标准湿度的环境中 1 小时后做性能测试。测试期间样品应保持干燥. After 5 cycles of following conditions, the sample shall be allowed to stand under normal temperature and humidity conditions for 1 h. and measurements shall be made. During the test water drops shall be removed. 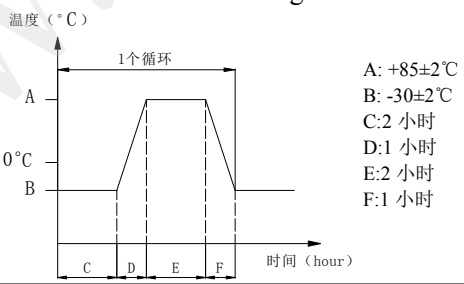 	Item3 Item4.1 Item4.2
5.4	恒定湿热测试 Moisture resistance	样品应按照以下实验条件进行测试，实验后样品应放在常温及标准湿度的环境中 1 小时后做性能测试： Following the test set forth below the sample shall be left in normal temperature and humidity conditions for 1 h before measurements are made: （1） 温度：60±2℃ temperature: 60±2℃ （2） 相对湿度：90%～95% relative humidity:90% to 95% （3） 时间：96h time: 96h	接触电阻：≤200mΩ Contact resistance≤200mΩ 绝缘电阻：≥10MΩ Insulation Resistance≥10MΩ Item3.3 Item4.1 Item4.2

WWW.SZYJZJ.COM

项目 ITEM		试 验 条 件 TEST CONDITIONS	要求 REQUIREMENTS
5.5	硫化试验 Sulfuration resistance	样品应按照以下实验条件进行测试，实验后样品应放在常温及标准湿度的环境中 1 小时后做性能测试： Following the test set forth below the sample shall be left in normal temperature and humidity conditions for 1 h before measurements are made: （1） H_2S 气体浓度：3ppm±1ppm H_2S gas concentration: 3ppm±1ppm （2） 时间：72h Time: 72h （3） 温度：40±2℃（90～95%RH） temperature: 40±2℃（90～95%RH）	接触电阻：≤200mΩ Contact resistance≤200mΩ Item3.3 Item4.1 Item4.2
5.6	盐雾试验 Salt Mist	在以下设定条件下进行测量: The switch shall be checked after following test: （1）温度：35℃±2℃ temperature: 35℃±2℃ （2）盐溶液浓度：5±1%（质量百分比） salt solution : 5±1%(solids by mass) （3）时间： 24±1h Time: 24±1h 实验后的盐沉积物后水冲掉 After test, salt deposit shall be removed by running water.	金属件上没有腐蚀斑点 No remarkable corrosion shall be recognized in metal part.
5.7	工作寿命 Operation life	测试连接器在 25±3 次/分钟的插拔速度下必须承受 10,000 次的插拔循环。 Mated and unmated connector up to10,000cycles at a rate of 25±3cycles per Minute.	接触电阻≤1Ω Contact resistance≤1Ω 绝缘电阻≥10MΩ Insulation Resistance≥10MΩ 触点抖动 ON-20ms max Bounce OFF-20ms max 按力：初值的±30% Operating Force: initial value±30% Item3.3 Item4.2

WWW.DZYIZJ.COM

项目 ITEM		试 验 条 件 TEST CONDITIONS	要求 REQUIREMENTS
5.8	可焊性 Solderability	在以下设定条件下进行测量: Measurements shall be made following the test set forth below: （1）焊接温度:245±5℃ Solder temperature : 245±5℃ （2）浸入时间:3s±0.5s Immersion time: 3s±0.5s	除边缘外涂层应均匀覆盖90%以上 Except for the edge, the coating should cover a minimum 90%
6．耐焊接热： SOLDERING CONDITIONS:			
6.1	手工焊接 Hand soldering	请按以下条件进行焊接： Please practice according to below conditions: （1）焊锡温度：≤350℃ Soldering temperature: ≤350℃ （2）连续焊接时间：≤3 s Continuous soldering time: ≤3 s （3）电烙铁金属头不得碰触产品本体，电烙铁不得对产品、端子施加压力 The soldering iron cannot touch , exert pressure on the product or the terminal.	

WWW.DZYJZJ.COM

项目 ITEM		推 荐 条 件 Recommended conditions
6.2	回流焊 Conditions for reflow	对于 SMT 产品，请按以下条件进行焊接： For SMT products, Pls soldering by follow conditions: 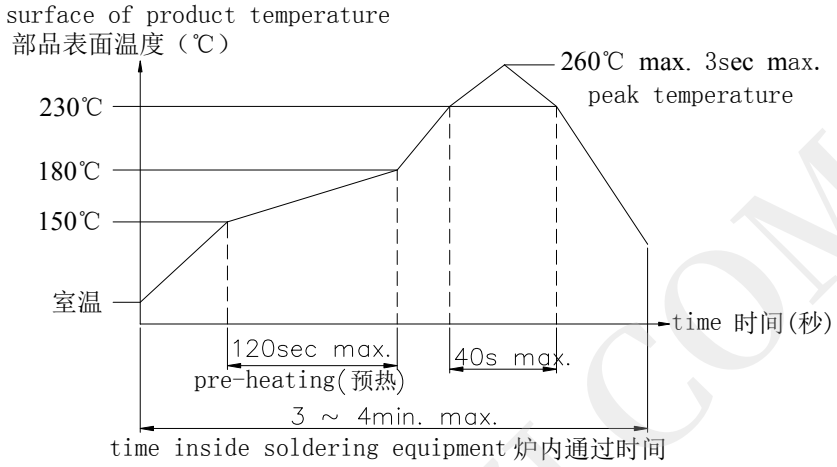 注意：以上提及的条件是零部件上 PWB 表面的温度，由于 PWB 的材料、尺寸、厚度等不同，PWB 从开关表面获得的温度也会有很大产不同，因此，千万小心不要让开关表面温度超过 260℃ Attention:the condition above is the temperature of the PWB surface on the parts,and PWB will get different temperature because of the differences of materials,sizes,thickness and so on.Should control it below 260℃

注意事项(Notes):

a、印刷基板的焊盘尺寸参见产品图。

The pad size of the printed substrate is shown in the product diagram.

b、在使用烙铁的情况下，焊锡温度应在 350℃以下、3 秒以内。

In the case of using soldering iron, soldering conditions shall be 350℃ max and 3 sec.max.

c、防止助焊剂从开关的顶端渗入

Prevent flux penetration from the top of the switch

d、开关浸焊后，注意不要用溶剂或类似品清洗开关。

After switches were soldered,please be careful not to clean switches with solvent or other similar products.

e、浸焊后，注意不要在顶部施加负荷。

Right after switches were soldered;please be careful not to load to on the knobs of switches.

f、注意不要施加超负荷的压力或晃动开关。

Please be cautions not to give excessive static load or shock to switches.

g、开关浸焊后，印刷基板注意不要叠放。

Please be careful not to pile up P.W.B.after switches were soldered

WWW.DZYZJ.COM

GANGYUAN

APPROVAL SPECIFICATIONS

Product name	P/N	Version	Document No.	Page
MICRO USB	UB1611-HGN	A/00		10/10

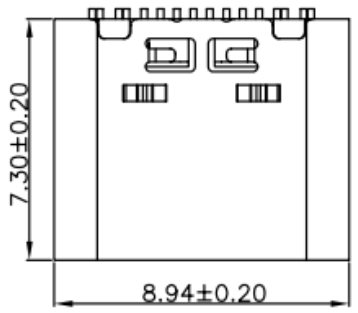

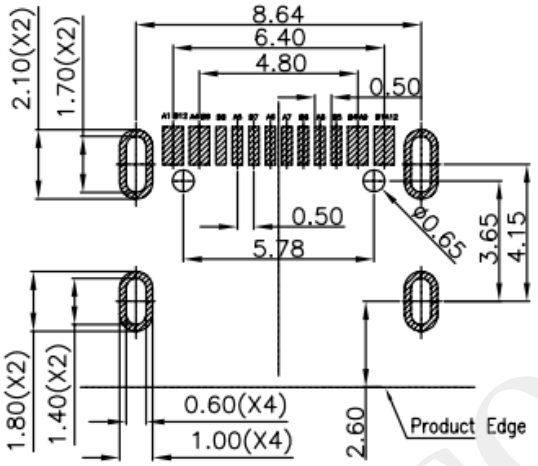

RECOMMENDED P.C.B. LAYOUT
TOLERANCE UNSPECIFIED ±0.05mm

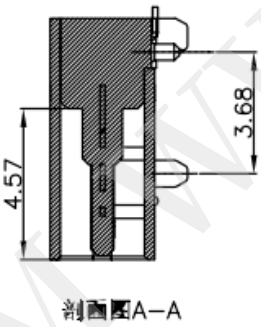

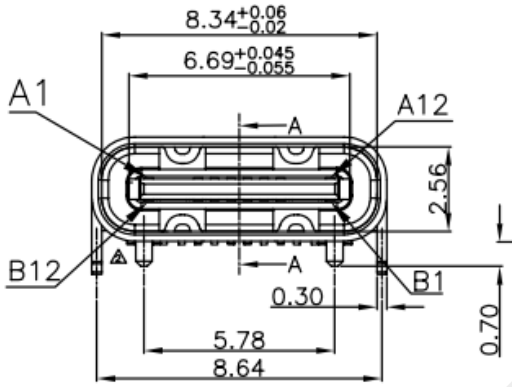

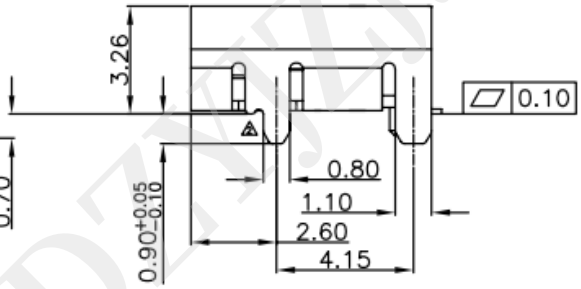

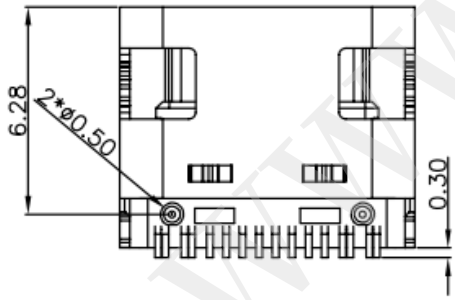

General tolerance：±0.2mm

A1	GND	B12	GND
A4	VBUS	B9	VBUS
A5	CC1	B8	SBU2
A6	DP1	B7	DN2
A7	DN1	B6	DP2
A8	SBU1	B5	CC2
A9	VBUS	B4	VBUS
A12	GND	B1	GND
PIN	SIGNAL NAME	PIN	SIGNAL NAME

NO.	NAME	MATERIAL	QTY.	FINISHING
1	塑胶底座	LCP	1	UL 94V-0
2	外壳	SUS304	1	镀镍
3	端子	C7025	16	Au 1u”
4	屏蔽板	SUS301	1	

WWW.DZWZJ.COM