RoHS

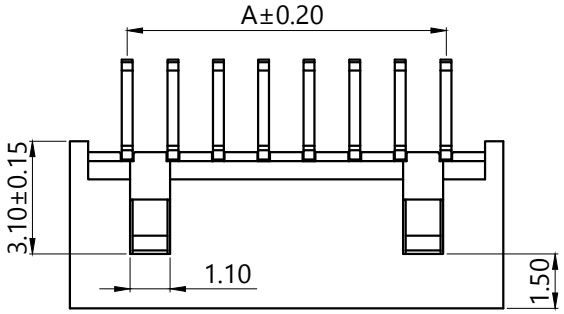

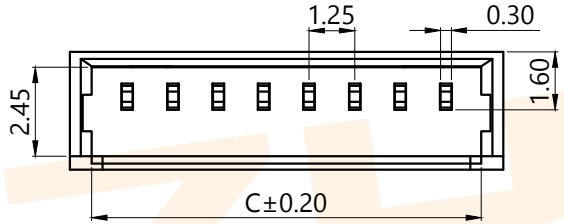

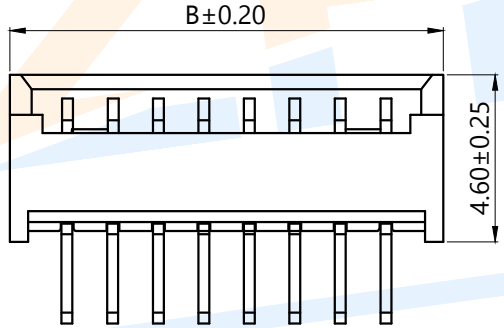

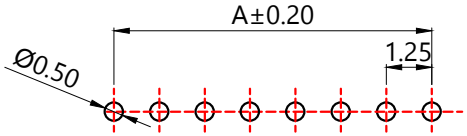

适用线路板(PCB LAYOUT)

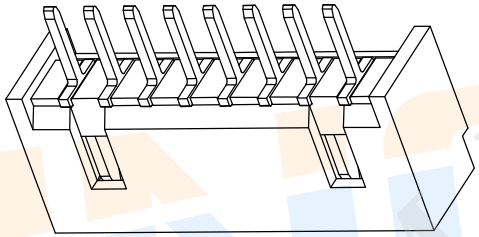

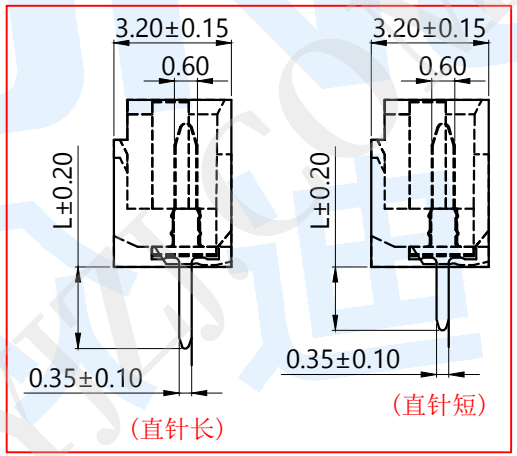

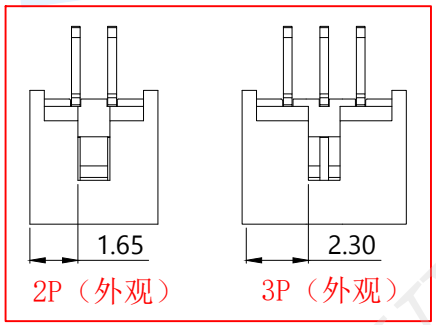

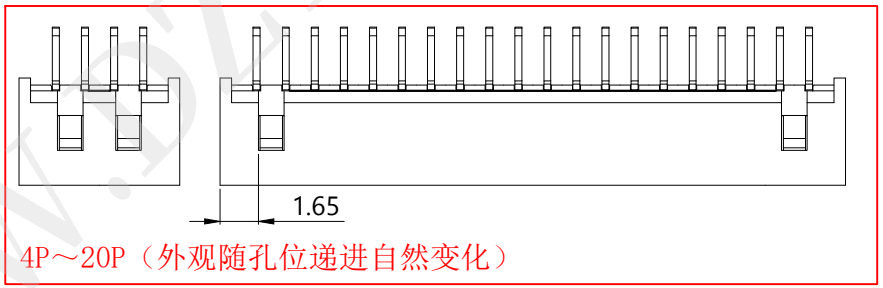

Curved needle length	
Code	L
C17	1.7
C22	2.2

Model No.	Pin	A	B	C
WAFER-MX1.25-2PZZ-C□□-9T	2	1.25	4.45	3.20
WAFER-MX1.25-3PZZ-C□□-9T	3	2.50	5.70	4.45
WAFER-MX1.25-4PZZ-C□□-9T	4	3.75	6.95	5.70
WAFER-MX1.25-5PZZ-C□□-9T	5	5.00	8.20	6.95
WAFER-MX1.25-6PZZ-C□□-9T	6	6.25	9.45	8.20
WAFER-MX1.25-7PZZ-C□□-9T	7	7.50	10.70	9.45
WAFER-MX1.25-8PZZ-C□□-9T	8	8.75	11.85	10.70
WAFER-MX1.25-9PZZ-C□□-9T	9	10.00	13.20	11.85
WAFER-MX1.25-10PZZ-C□□-9T	10	11.25	14.35	13.20
WAFER-MX1.25-11PZZ-C□□-9T	11	12.50	15.70	14.35
WAFER-MX1.25-12PZZ-C□□-9T	12	13.75	16.95	15.70
WAFER-MX1.25-13PZZ-C□□-9T	13	15.00	18.20	16.95
WAFER-MX1.25-14PZZ-C□□-9T	14	16.25	19.45	18.20
WAFER-MX1.25-15PZZ-C□□-9T	15	17.50	20.70	19.45
WAFER-MX1.25-16PZZ-C□□-9T	16	18.75	21.95	20.70
WAFER-MX1.25-17PZZ-C□□-9T	17	20.00	23.20	21.95
WAFER-MX1.25-18PZZ-C□□-9T	18	21.25	24.45	23.20
WAFER-MX1.25-19PZZ-C□□-9T	19	22.50	25.70	24.45
WAFER-MX1.25-20PZZ-C□□-9T	20	23.75	26.95	25.70

Specifications/技术规格:

1.Poles/线数：2～20P
2.Wire range/适用线规：AGW 32#～28#
3.Applicable PC board thickness/适用PC板厚度：0.6～1.2mm
4.Current rating/额定电流：1.0A
5.Voltage rating/额定电压：125V DC/AC
6.Insulation Resistance/绝缘电阻：100MΩ Min
7.Dielectric Withstanding/ 耐电压：500V AC/minute
8.Contact Resistance/ 接触电阻：20mΩ Max
9.Operating Temperature/ 工作温度：-25℃ to +85℃

NO.	Name	Number	Qty	Materil	Remarks
Ⓑ	Terminal			Brass	Plating Sn
Ⓐ	Housing		1	PA9T	Off White

ZHONGDI® 众迪 Zhongdi Electronic Technology Co., Ltd

angle	±2°		
10~30	±0.30		
5~10	±0.20		
~ 5	±0.10		
modify	Review	Approved	Tolerance not specified

design		date	
Review		date	
Approved		date	
Drawing number:			
Proportion	1:1	unit	mm
gape number			

name: WAFER CONNECTOR

model: WAFER-MX1.25-□□PZZ-C□□-9T

A4