| NO. | ECN NO. | DESCRIPTION | DATE |
|---|---|---|---|
| | | | |

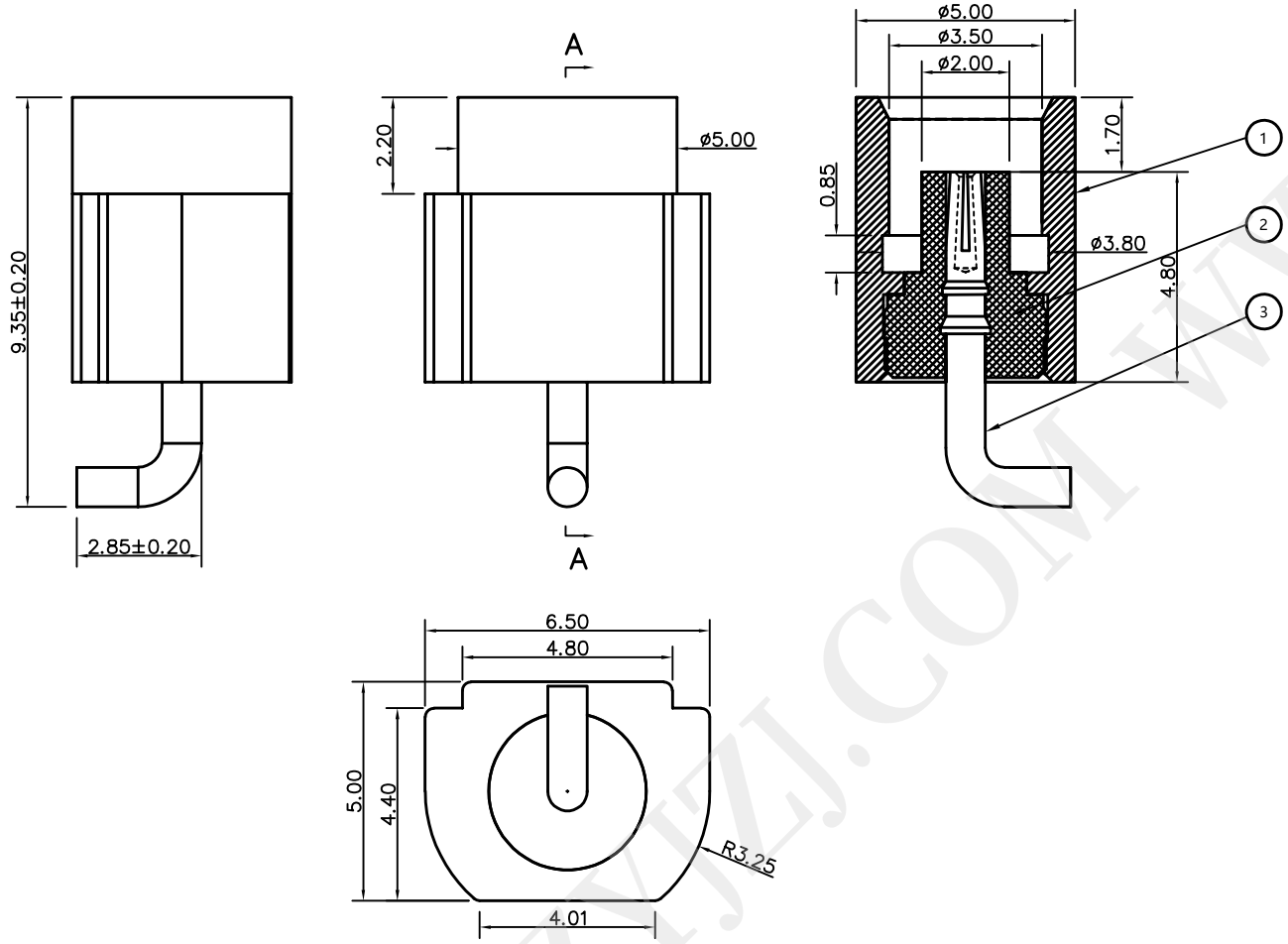


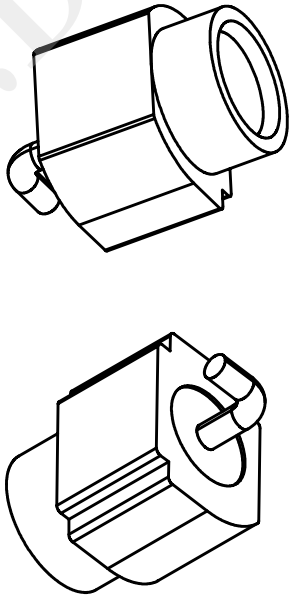

| 电气性能 (ELECTRICAL CHARACTERISTICS) | | |
|---|---|---|
| 特性阻抗 (Impedance) | | 50 Ω |
| 工作电压 (Voltage rating) | | 335V(rms) |
| 频率范围 (Frequency range) | | 0～6GHz |
| 介质耐压 (Dielectric withstanding voltage) | | >500 V rms max |
| 接触电阻 (Contact resistance) | 内导体 (Center contact) | <5.0 mΩ |
| | 外导体 (Outer contact) | <2.5 mΩ |
| 绝缘电阻 (Insulation resistance) | | >1000 MΩ |
| 插入损耗 (Insertion loss) | | 0.1√F (GHz) dB MAX |
| 射频泄漏 (RF- leakage) | | N/A |
| 电压驻波比 (VSWR) | | <1.20 |
| 三阶互调 (3rd Intermodulation) | | N/A |

| 机械特性 (MECHANICAL CHARACTERISTICS) | |
|---|---|
| 中心针保持力(Centercontact retention force) | 4 Lbs 焊接后 |
| 绝缘体保持力 (Insultor retention force) | 2.3 Lbs |
| 机械耐久性 (Durability) | ≥ 500 cycles |

| 环境参数 (ENVIRONMENTAL CHARACTERISTICS) | |
|---|---|
| 工作温度 (Temperature range) | -40℃~+125℃ |

| NO. | 简称 | 零件料号 | 用量 |
|---|---|---|---|
| 3 | 中心针 | P12092-QB09-G1 | 1 |
| 2 | 绝缘体 | I38047-QT20 | 1 |
| 1 | 主体 | B65065-DB50-G1 | 1 |


深圳市鑫扬泽电子有限公司
HTTP://WWW.XYZPOGOPIN.COM
TEL:0755-28773277 FAX:0755-28891353


| | | | |
|---|---|---|---|
| SCALE: | N/A | UNIT | mm |
| SHEET: | 1 of 1 | PROJECTION | |
| DATE: | 2017.06.30 | VER. | D.0 |

THE UNMARKED TOLERANCE ARE AS BELOW :

| LENGTH | | ANGLE | |
|---|---|---|---|
| X.XX | ±0.05mm | X.XX | ±0.50° |
| X.X | ±0.10mm | X.X | ±1.00° |
| X. | ±0.20mm | X. | ±2.00° |

| | | | |
|---|---|---|---|
| DESIGNED BY: | | DWG. NO. | YZ140865093T-01 |
| CHECKED BY: | | TITLE: | 插件连接器 |
| APPROVED BY: | | | |

WWW.DZYIZJ.COM